HCD-M333

SERVICE MANUAL

Ver. 1.5 2005.02

Self Diagnosis Supported model

Canadian Model
AEP Model
UK Model
E Model
Chinese Model
Australian Model

HCD-M333 is the Amplifier, CD player, MD deck, Tape player and Tuner section in CMT-M333NT.

Photo : SILVER TYPE

US and foreign pafents lisensed from Dolby Labaratories.

CD Section	Model Name Using Similar Mechanism	NEW
	CD Mechanism Type	CDM55A-30BBD61B
	Base Unit Type	BU-30BBD61B
	Optical Pick-up Type	A-MAX. 3
MD Section	Model Name Using Similar Mechanism	HCD-CP505
	MD Mechanism Type	MDM-7S2D
	Optical Pick-up Type	KMS-262E
Tape deck Section	Model Name Using Similar Mechanism	NEW
	Tape Transport Mechanism Type	CMAL1Z-236A

SPECIFICATIONS

Amplifier section

Canadian model:
Continuous RMS power output (reference): 25 + 25 W (6 ohms at 1 kHz, 10% THD)
Total harmonic distortion less than 0.09% (6 ohms at 1 kHz, 6 W)
European model:
DIN power output (rated): 20 + 20 W (6 ohms at 1 kHz, DIN)
Continuous RMS power output (reference): 25 + 25 W (6 ohms at 1 kHz, 10% THD)
Music power output (reference): 45 + 45 W
Other models:
DIN power output: 20 + 20 W (6 ohms at 1 kHz, DIN)
Continuous RMS power output (reference): 25 + 25 W (6 ohms at 1 kHz, 10% THD)

Inputs
ANALOG IN: Sensitivity 250 mV, impedance 47 kilohms
DIGITAL OPTICAL IN (supported sampling frequencies: 32 kHz, 44.1 kHz and 48 kHz)
Outputs
PHONES (stereo minijack): accepts headphones with an impedance of 8 ohms or more
SPEAKER: accepts impedance of 6 to 16 ohms

CD player section

Laser: Semiconductor laser (CD: λ=780 nm) Emission duration: continuous
Frequency response: 2 Hz – 20 kHz

MD deck section

System: Minidisc digital audio system
Laser: Semiconductor laser (λ=780 nm) Emission duration: continuous
Sampling frequency: 44.1 kHz
Frequency response: 5 Hz – 20 kHz

Tape deck section

Recording system: 4-track 2-channel stereo
Frequency response: 60 – 10,000 Hz (±3 dB), using Sony TYPE I cassettes

— Continued on next page —

MICRO HI-FI COMPONENT SYSTEM

9-877-180-06
2005B16-1
© 2005.02

Sony Corporation
Personal Audio Group
Published by Sony Engineering Corporation

SONY®

Tuner section

FM stereo, FM/AM superheterodyne tuner

FM tuner section

Tuning range

North American model:	87.5 – 108.0 MHz (100 kHz step)
Other models:	87.5 – 108.0 MHz (50 kHz step)
Aerial	FM lead aerial
Aerial terminals	75 ohms unbalanced
Intermediate frequency	10.7 MHz

AM tuner section

Tuning range

Pan-American model:	530 – 1,710 kHz (with the tuning interval set at 10 kHz) 531 – 1,710 kHz (with the tuning interval set at 9 kHz)
European model:	531 – 1,602 kHz (with the tuning interval set at 9 kHz)
Other models:	530 – 1,710 kHz (with the tuning interval set at 10 kHz) 531 – 1,602 kHz (with the tuning interval set at 9 kHz)
Aerial	AM loop aerial, external aerial terminal
Intermediate frequency	450 kHz

General

Power requirements

North American model:	120 V AC, 60 Hz
European model:	230 V AC, 50/60 Hz
Korean model:	220 V AC, 60 Hz
Other models:	220 – 240 V AC, 50/60 Hz

Power consumption

European model:	65 W 0.3 W or less (in Power Saving mode)
Other models:	65 W

Dimensions (w/h/d) incl. projecting parts and controls

Amplifier/Tuner/Tape/MD/CD section: Approx. 160 × 217 × 345 mm

Mass

Amplifier/Tuner/Tape/MD/CD section: Approx. 5.6 kg

Design and specifications are subject to change without notice.

NOTES ON HANDLING THE OPTICAL PICK-UP BLOCK OR BASE UNIT

The laser diode in the optical pick-up block may suffer electrostatic break-down because of the potential difference generated by the charged electrostatic load, etc. on clothing and the human body.
During repair, pay attention to electrostatic break-down and also use the procedure in the printed matter which is included in the repair parts.
The flexible board is easily damaged and should be handled with care.

FOR CD

NOTES ON LASER DIODE EMISSION CHECK

The laser beam on this model is concentrated so as to be focused on the disc reflective surface by the objective lens in the optical pick-up block. Therefore, when checking the laser diode emission, observe from more than 30 cm away from the objective lens.

FOR MD

NOTES ON LASER DIODE EMISSION CHECK

Never look into the laser diode emission from right above when checking it for adjustment. It is feared that you will lose your sight.

Laser component in this product is capable of emitting radiation exceeding the limit for Class 1.

Flexible Circuit Board Repairing

- Keep the temperature of the soldering iron around 270 ˚C during repairing.
- Do not touch the soldering iron on the same conductor of the circuit board (within 3 times).
- Be careful not to apply force on the conductor when soldering or unsoldering.

This appliance is classified as a CLASS 1 LASER product. This label is located on the rear exterior.

The following caution label is located inside the apparatus.

CAUTION
Use of controls or adjustments or performance of procedures other than those specified herein may result in hazardous radiation exposure.

Notes on chip component replacement

- Never reuse a disconnected chip component.
- Notice that the minus side of a tantalum capacitor may be damaged by heat.

Unleaded solder

Boards requiring use of unleaded solder are printed with the lead-free mark (LF) indicating the solder contains no lead.
(Caution: Some printed circuit boards may not come printed with the lead free mark due to their particular size.)

TABLE OF CONTENTS

1. SERVICING NOTES 10

2. GENERAL 14

3. DISASSEMBLY 16
- 3-1. Top Panel Section 17
- 3-2. Cassette Mechanism Deck 18
- 3-3. Front Panel Section 18
- 3-4. PANEL Board, H/P Board, LED Board 19
- 3-5. Back Panel Section 20
- 3-6. MAIN Board 20
- 3-7. MD Mechanism Deck (MDM-7S2D) 21
- 3-8. MD DIGITAL Board 21
- 3-9. Holder Assy 22
- 3-10. BD (MD) Board 22
- 3-11. Motor Section 23
- 3-12. Over Write Head (HR901) 23
- 3-13. Mini Disc Device (KMS-262E) 24
- 3-14. POWER Board, Tuner (FM/AM) 24
- 3-15. REG Board, AMP Board 25
- 3-16. TRANS Board 25
- 3-17. CD Mechanism Deck (CDM55A-30BBD61B) 26
- 3-18. Cam (CDM55) 26
- 3-19. Base Unit (BU-30BBD61B) 27
- 3-20. Optical Pick Up (BU-30B Assy) 27

4. TEST MODE 28

5. ELECTRICAL ADJUSTMENTS
- TAPE SECTION 33
- CD SECTION 35
- MD SECTION 36

6. DIAGRAMS 44
- 6-1. Circuit Boards Location 47
- 6-2. Block Diagrams
  - – CD Section – 48
  - – MD Section – 49
  - – USB Section – 50
  - – MAIN Section – 51
- 6-3. Printed Wiring Board – BD (CD) Board – 52
- 6-4. Schematic Diagram – BD (CD) Board – 53
- 6-5. Printed Wiring Board – BD (MD) Board – 54
- 6-6. Schematic Diagram – BD (MD) Board (1/2) – 55
- 6-7. Schematic Diagram – BD (MD) Board (2/2) – 56
- 6-8. Printed Wiring Board – MD DIGITAL Board – 57
- 6-9. Schematic Diagram – MD DIGITAL Board (1/2) – 58
- 6-10. Schematic Diagram – MD DIGITAL Board (2/2) – 59
- 6-11. Printed Wiring Board – TC Board – 60
- 6-12. Schematic Diagram – TC Board – 61
- 6-13. Printed Wiring Board – MAIN Section – 62
- 6-14. Schematic Diagram – MAIN Section (1/2) – 63
- 6-15. Schematic Diagram – MAIN Section (2/2) – 64
- 6-16. Printed Wiring Board – H/P Board – 65
- 6-17. Schematic Diagram – H/P Board – 66
- 6-18. Printed Wiring Board – PANEL Section – 67
- 6-19. Schematic Diagram – PANEL Section – 68
- 6-20. Printed Wiring Board – REG Board / TRANS Board – 69
- 6-21. Schematic Diagram – REG Board / TRANS Board – 70
- 6-22. Printed Wiring Board – AMP Board – 71
- 6-23. Schematic Diagram – AMP Board – 72
- 6-24. Printed Wiring Board – POWER Board – 73
- 6-25. Schematic Diagram – POWER Board – 74
- 6-26. IC Block Diagrams 75
- 6-27. IC Pin Function Description 84

7. EXPLODED VIEWS
- 7-1. Overall Section 90
- 7-2. Front Panel Section 91
- 7-3. Back Panel Section 92
- 7-4. MD Mechanism Deck Section-1 (MDM-7S2D) 93
- 7-5. MD Mechanism Deck Section-2 (MDM-7S2D) 94
- 7-6. CD Mechanism Deck Section-1 (CDM55A-30BBD61B) 95
- 7-7. CD Mechanism Deck Section-2 (BU-30BBD61B) 96

8. ELECTRICAL PARTS LIST 97

: LEAD FREE MARK

Unleaded solder has the following characteristics.

- Unleaded solder melts at a temperature about 40°C higher than ordinary solder.
  Ordinary soldering irons can be used but the iron tip has to be applied to the solder joint for a slightly longer time.
  Soldering irons using a temperature regulator should be set to about 350°C.
  Caution: The printed pattern (copper foil) may peel away if the heated tip is applied for too long, so be careful!
- Strong viscosity
  Unleaded solder is more viscous (sticky, less prone to flow) than ordinary solder so use caution not to let solder bridges occur such as on IC pins, etc.
- Usable with ordinary solder
  It is best to use only unleaded solder but unleaded solder may also be added to ordinary solder.

SAFETY-RELATED COMPONENT WARNING!!

COMPONENTS IDENTIFIED BY MARK ⚠ OR DOTTED LINE WITH MARK ⚠ ON THE SCHEMATIC DIAGRAMS AND IN THE PARTS LIST ARE CRITICAL TO SAFE OPERATION. REPLACE THESE COMPONENTS WITH SONY PARTS WHOSE PART NUMBERS APPEAR AS SHOWN IN THIS MANUAL OR IN SUPPLEMENTS PUBLISHED BY SONY.

ATTENTION AU COMPOSANT AYANT RAPPORT À LA SÉCURITÉ!

LES COMPOSANTS IDENTIFÉS PAR UNE MARQUE ⚠ SUR LES DIAGRAMMES SCHÉMATIQUES ET LA LISTE DES PIÈCES SONT CRITIQUES POUR LA SÉCURITÉ DE FONCTIONNEMENT. NE REMPLACER CES COMPOSANTS QUE PAR DES PIÈSES SONY DONT LES NUMÉROS SONT DONNÉS DANS CE MANUEL OU DANS LES SUPPÉMENTS PUBLIÉS PAR SONY.

Self-diagnosis display

This system has a Self-diagnosis display function to let you know if there is a system malfunction. The display shows a code made up of three or five letters and a message alternately to show you the problem. To solve the problem refer to the following list. If any problem persists, consult your nearest Sony dealer.

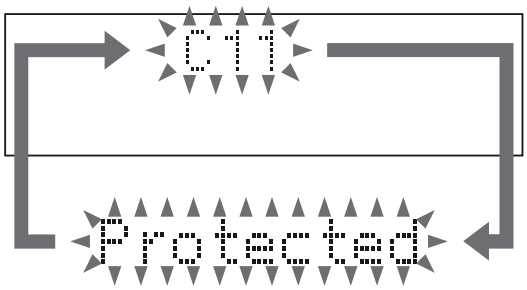

C11/Protected

The MD is protected against erasure.

➔Remove the MD and slide the tab to close the slot (page 15).

C12/Cannot Copy

You tried to record a CD with a format that the system does not support, such as a CD-ROM.

➔Remove the disc and turn off the system once, then turn it on again.

C13/REC Error

Recording could not be performed properly.

➔Move the system to a stable place, and start recording over from the beginning.

The MD is dirty or scratched, or the MD does not meet the standards.

➔Replace the MD and start recording over from the beginning.

C13/Read Error

The MD deck cannot read the disc information properly.

➔Remove the MD once, then insert it again.

C14/TOC Error

The MD deck cannot read the disc information properly.

➔Replace the MD.

➔Erase all the recorded contents of the MD using the All Erase Function (page 29).

C41/Cannot Copy

The sound source is a copy of a commercially available music software or CD-R.

c The Serial Copy Management System prevents making a digital copy (page 64). In addition, you cannot copy from a CD-R.

C71/Check OPT-IN

No component is connected to the DIGITAL OPTICAL IN jack, or you tried to record from the digital component which is not connected correctly.

c Connect the optional digital component correctly to the DIGITAL OPTICAL IN jack using the digital optical cable (not supplied) (page 52).

The power of the connected component is not turned on.

c Check if the power of the connected digital component is on. Refer to the operating instructions supplied with the component.

The digital optical cable is disconnected, or the power of the connected component is turned off while recording the digital audio from the component connected to the DIGITAL OPTICAL IN jack.

c Connect the digital optical cable, or turn on the power of the connected component.

E0001/MEMORY NG

The component has internal problem.

c Consult your nearest Sony dealer.

E0101/LASER NG

There is a problem with the laser pickup.

c The laser pickup may be damaged. Consult your nearest Sony dealer.

E0201/LOADING NG

There is a problem with loading.

c Consult your nearest Sony dealer.

Messages

One of the following messages may appear or flash in the display during operation.

CD

Cannot Edit
You tried to label a CD-TEXT disc.

CD No Disc
There is no disc in the player.

Name Full
There are already 50 disc titles stored in the system.

OVER
You have reached the end of the disc while pressing M during playback or pause.

Step Full!
You tried to program 26 or more tracks (steps).

MD

Assign None
All the tracks on an MD are registered into groups.

Auto Cut
The MD deck is pausing the recording because silence continued for 30 seconds or more during digital recording.

Blank Disc
The inserted recordable MD is new, or all tracks on the MD have been erased.

Cannot Edit
- A pre-mastered MD is in the deck.
- You tried to edit in Program or Shuffle Play mode.
- The track is recorded in MDLP mode.

Cannot REC
- A pre-mastered MD is in the deck.
- The function is switched to MD or PC.

Cannot SYNC!
- There is no disc in the MD deck, or the MD is protected against erasure.
- There is no time remaining on the MD.

Complete!
The editing operation of the MD is completed.

Disc Full!
There is no time remaining on the MD.

Eject
The MD deck is ejecting the MD.

Group Full!
An attempt was made to create a new group in excess of the maximum number of groups, or there are insufficient characters for updating the group management information.

Impossible
- You tried to make an impossible editing operation.
- You cannot perform Net MD operations during timer playback.
- You cannot combine or erase the tracks due to the system limitations of MDs.

Incomplete!
Adjustment of the recording level after recording or Fade-in and Fade-out procedures have failed since the system was either subject to vibration or there is a damaged or dirty disc in the tray.

Initialize
The power was off for a long time, so the system is initializing itself.

Name Full!
There is no more space to store track, disc or group titles.

No Change
While attempting to change the recording level after recording, you pressed ENTER/YES without actually changing the recording level, so no change was made.

No Disc
There is no disc in the MD deck.

OVER
You have reached the end of the MD while pressing M during pause mode.

Push STOP!
You pressed an invalid button during playback.

—Rehearsal—
The MD is playing the specified point for confirmation during the A-B Erase Function and the Divide Function (pages 30 and 33).

Retry
A reading failure has occurred, and the system is trying to read the data again.

S.F Edit!
You attempted to perform another operation while in S.F Edit (changing the recording level after recording, Fade-in, Fade-out) mode.

S.F Edit NOW

You pressed ?/1 while in S.F Edit (changing the recording level after recording, Fade-in, Fade-out) mode.

Smart Space

The signal was input again after silence continued for 3 or more but less than 30 seconds during digital recording, and the silence was cut to 3 seconds.

Step Full!

You tried to program 26 or more tracks (steps).

TOC Reading

The MD deck is reading the TOC information of the MD.

TOC Writing

The MD deck is writing the information of recorded or edited contents.

Track End

You have reached the end of the track while adjusting the dividing point during the Divide Function.

Tr Protected

Tracks and other data that have been checked out on Net MD equipment are protected, so you cannot use some of the MD editing functions.

TAPE

Cannot SYNC!

There is no tape in the tape deck, or the tab has been removed from the cassette.

No Tab

You cannot record the tape because the tab has been removed from the cassette.

No Tape

There is no tape in the tape deck.

Timer

OFF TIME NG!

The Daily Timer start and end times are set to the same time.

OVERLAP!

The Daily Timer setting or the Timer Recording setting overlaps with part or all of another timer setting.

Optional personal computer

Buffer

The personal computer is preparing the amount of data needed for playback while using the WEB RADIO function.

Busy NOW!

You pressed NET MD during check in or check out. Wait until the operation is completed.

Cannot Found

- Check that the personal computer is correctly connected to the internet while using the WEB RADIO function.
- Check that the URL registered to the preset is input correctly.

Cannot Pause

- The MIDI file plays while using the MUSIC LIBRARY function. You cannot pause MIDI file playback.
- You are playing a broadcast station that cannot be paused while using the WEB RADIO function.

Cannot Play

Check that the music file is registered correctly to the MUSIC LIBRARY.

Check USB

The USB cable is not connected properly. Check the connection.

CONNECT

Check in and check out is underway. (If you attempt an invalid operation at this time, “CONNECT!” appears.)

Connecting

The personal computer is connecting to the broadcast station server.

Disconnect

- Check that the personal computer is correctly connected to the internet when using the WEB RADIO function.
- You were disconnected from the broadcast station server.

Net MD

The Net MD function is on. (If you attempt an invalid operation at this time, “Net MD!” appears.)

Note 1: About "R"
As this unit has only a few buttons, some operations require the use of remote commander (RM-SM100W/provided with unit) buttons. These operations are indicated as "R" in this manual.
Example: MENU/NO "R" ...Press the MENU/NO button of the remote commander.
Note 2: Incorrect operations may be performed if the test mode is not entered properly.
In this case, press the I/⏻ button to turn the power off, and retry to enter the test mode.

How to Operate the Self-diagnostics Function (Error History Display Mode)

Note: Use the self-diagnostics function in the "error history display mode" of the test mode. The least required procedure is described below. Do not enter any other modes by mistake. If you have entered any other modes accidentally, press the MENU/NO "R" button to exit the mode.

1. Press the I/⏻ button to turn on the power.
2. Press the FUNCTION button to select the "MD" function.
3. While pressing the ■ button and the REC MODE button at the same time, press the ⏏ (MD) button.
4. Press the ▶▶I "R" button to display "[Service]". Then press the ENTER/YES "R" button.
5. Press the ▶▶I "R" button to display "Err Display".
6. Press the ENTER/YES "R" button to enter the error history display mode and "op rec tm" appears.
7. Select the desired contents that you want to display or to execute using the I◀◀ "R" button or the ▶▶I "R" button.
8. Press the TIMER SET "R" button to display or to execute the selected contents.
9. Press the TIMER SET "R" button again to return to step 7.
10. Press the MENU/NO "R" button. The message "Err Display" appears and you exit the error history mode.
11. Press the REPEAT "R" button to exit the test mode.
12. Press the I/⏻ button to turn off the power.

Items of Error History Mode Items and Contents

Display	History
op rec tm	Displays the accumulated recording time. When the accumulated recording time is more than 1 minute, displays the hour and minute When less than 1 minute, displays “Under 1 min” The display time indicates the time when the laser is set to high power more, which is about 1/4 of the actual recording time.
op play tm	Displays the accumulated playback time. When the accumulated playback time is more than 1 minute, displays the hour and minute When less than 1 minute, displays “Under 1 min”
spdl rp tm	Displays the accumulated rotating time of the spindle motor. When the accumulated rotating time is more than 1 minute, displays the hour and minute When less than 1 minute, displays “Under 1 min”
retry err	Displays the accumulated number of retry errors during recording and playback Displays “r □□ p □□”. □□ after “r” is the number of errors during recording. □□ after “p” is the number of errors during playback. This is displayed in hexadecimal from 00 to FF.
total err	Displays the total number of errors Displays “total □□”. This is displayed in hexadecimal from 00 to FF.
err history	Displays the past ten errors. Displays “0X ErrCd@@”. X is the history number. The younger the number, the more recent is the history (00 is the latest). @@ is the error code. Select the error history number by pressing the ⏮ “R” or ⏭ “R” button.
retry adrs	Displays the past five retry addresses. Displays “□□ ADRS □□□□”, □□ is the history number, □□□□ is the cluster with the retry error. Select the error history number by pressing the ⏮ “R” or ⏭ “R” button.
er refresh	Mode for erasing the error and retry address histories Procedure 1. Press the TIMER SET “R” button when displayed as “er refresh”. 2. When the display changes to “er refresh?”, press the ENTER/YES “R” button When “Complete!!” is displayed, it means erasure has completed. Be sure to check the following after executing this mode. *Data has been erased. *Perform recording and playback, and check that the mechanism is normal.
tm refresh	Mode for erasing the accumulated recording time and accumulated playing time. Procedure 1. Press the TIMER SET “R” button when displayed as “tm refresh”. 2. When the display changes to “tm refresh?”, press the ENTER/YES “R” button. When “Complete!” is displayed, it means erasure has completed.
op change	Mode for erasing the accumulated time of op rec tm, op play tm. Use these histories as a guide line for the time of replacement of the optical pick-up. If the optical pick-up has been replaced, perform this procedure and erase the past history. Procedure 1. Press the TIMER SET “R” button when displayed as “op change”. 2. When the display changes to “op change?”, press the ENTER/YES “R” button. When “Complete!” is displayed, it means erasure has completed.
spdl change	Mode for erasing the accumulated spdl rp tm time Use these histories as the guide line for the time of replacement of the spindle motor. If the spindle motor has been replaced, perform this procedure and erase the past history. Procedure 1. Press the TIMER SET “R” button when displayed as “spdl change” 2. When the display changes to “spdl change?”, press the ENTER/YES “R” button. When “Complete!” is displayed, it means erasure has completed.

Table of Error Codes

Error Code	Description
10	Could not perform loading
11	The changer error occurred
12	Loading switches combined incorrectly
20	Timed out without reading the top of PTOC
21	Could read top of PTOC, but detected error
22	Timed out without accessing UTOC
23	Timed out without reading UTOC
24	Error in UTOC
30	Could not start playback
31	Error in sector
40	A cause of retry occurred during normal recording
41	Retried due to DRAM overflow
42	Retry occurred during TOC writing
43	Retry aborted during S.F editing
50	Other than access processing, and could not read address.
51	Focus NG occurred and overran.

SECTION 1
SERVICING NOTE

Note 1: About "R"
As this unit has only a few buttons, some operations require the use of remote commander (RM-SM100W/provided with unit) buttons. These operations are indicated as "R" in this manual.
Example: MENU/NO "R" ...Press the MENU/NO button of the remote commander.

Note 2: Incorrect operations may be performed if the test mode is not entered properly.
In this case, press the I/⏻ button to turn the power off, and retry to enter the test mode.

Note 3: If the disc tray does not open and the message "LOCKED" appears, press the two buttons of ■ and ⏏ (CD) at the same for 5 seconds or longer.
Then the lock is released, the message "UNLOCKED" appears for 2 seconds and the disc tray opens.

Disc Tray Lock

The disc tray lock function for the antitheft of a demonstration disc in the store is equipped.

Procedure:

1. Press the I/⏻ button to turn the set on.
2. Select the function "CD".
3. A disc is put in and a tray is closed.
4. Press two buttons of ■ and ⏏ (CD) simultaneously for five seconds.
5. The message "LOCKED" is displayed and the tray is locked. (Even if turning power on/off, the tray is still locked.)
6. Press two buttons of ■ and ⏏ (CD) simultaneously for five seconds again.
7. The message "UNLOCKED" is displayed and the tray is unlocked.

Service Position-1 (Checking TC Section)

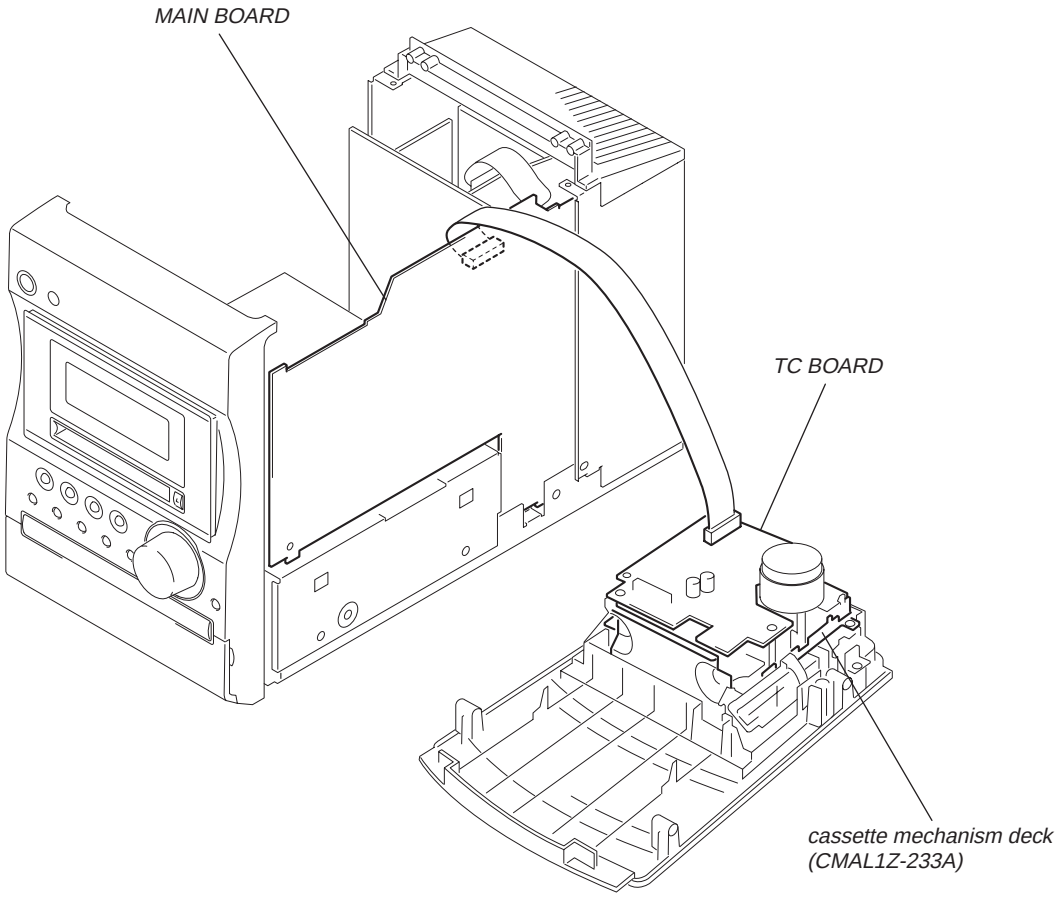

Service Position-2 (Checking CD Mechanism and MD Mechanism Section)

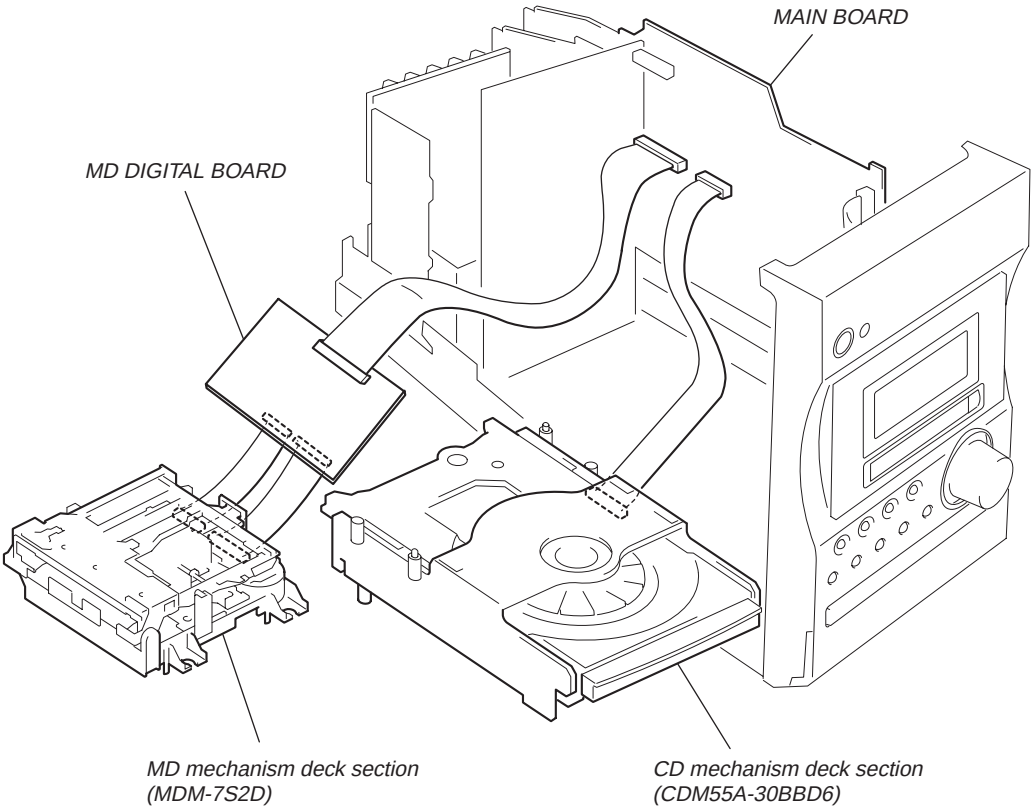

Service Position-3 (Checking Power Supply Section)
Connect the POWER board (CN985) and the AMP board (CN805) with the extension cable (6P)(J-2501-229-A).

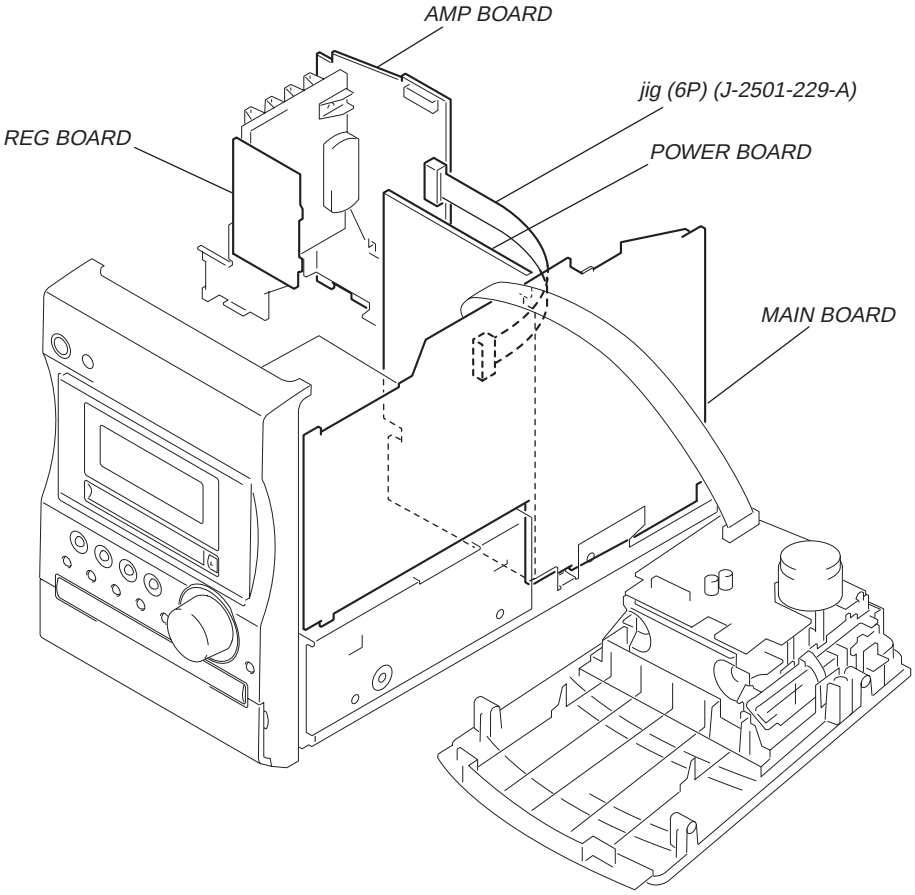

Jig For Checking BD (MD) Board Waveform

The special jig (J-2501-196-A) is useful for checking the waveform of the BD (MD) board. The names of terminals and the checking items to be performed are shown as follows.

I+3V : For measuring Iop (Check the deterioration of the optical pick-up laser)
Iop : For measuring Iop (Check the deterioration of the optical pick-up laser)
GND : Ground
TE : TRK error signal (Traverse adjustment)
FE : Focus error signal
VC : Reference level for checking the signal
RF : RF signal (Check jitter)

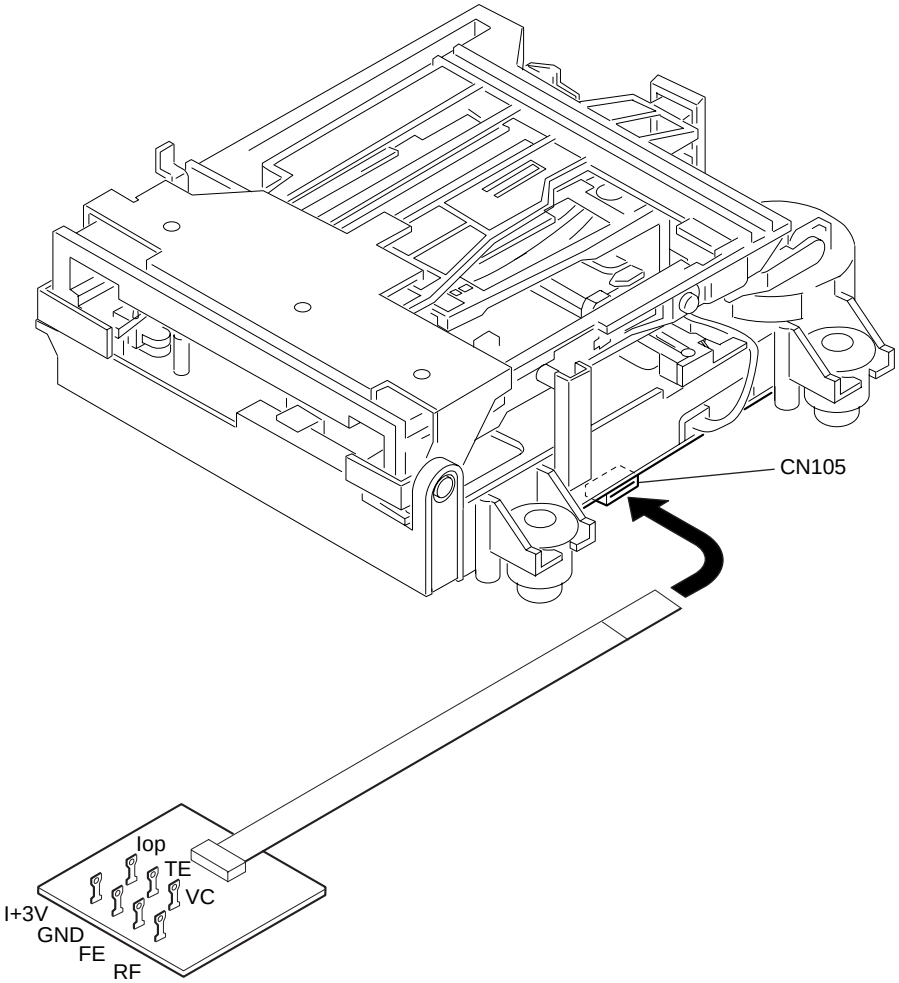

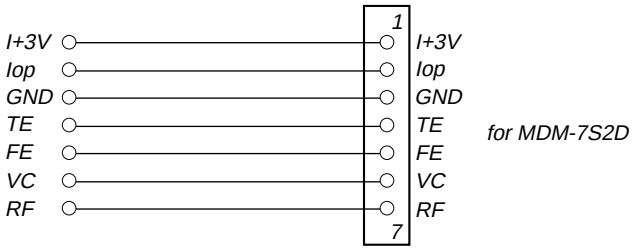

Iop DATA RECORDING AND DISPLAY WHEN OPTICAL PICK-UP AND NON-VOLATILE MEMORY (IC195 OF BD (MD) BOARD) ARE REPLACED

The Iop value labeled on the optical pick-up can be stored in the non-volatile memory. By storing the value, it will eliminate the need to look at the value on the label of the optical pick-up. When replacing the optical pick-up or non-volatile memory (IC195 of BD (MD) board), store the Iop value on the optical pick-up according to the following procedure.

Record Precedure:

1. Press the I/⏻ button to turn on the power.
2. Press the FUNCTION button to select the "MD" function.
3. While pressing the ■ button and the REC MODE button at the same time, press the ⏏ (MD) button.
4. Press the ▶▶I "R" button to display "[Service]". Then press the ENTER/YES "R" button.
5. Press the ▶▶I "R" button to display "Iop Write" (C05) and press the ENTER/YES "R" button.
6. The display becomes "Ref=@@@.@" (@ is an arbitrary number) and the numbers which can be changed will blink.
7. Input the Iop value written on the optical pick-up.
   To select the number : Press the I◀◀ "R" button or the ▶▶I "R" button.
   To select the digit : Press the TIMER SET "R" button.
8. When the ENTER/YES "R" button is pressed, the display becomes "Measu=@@@.@" (@ is an arbitrary number).
9. As the adjustment results are stored for the 6 value. Leave it as it is and press the ENTER/YES "R" button.
10. "Complete!" will be displayed momentarily. The value will be stored in the non-volatile memory and the display will become "Iop Write" (C05).
11. Press the REPEAT "R" button to exit the mode.
12. Press the I/⏻ button to turn off the power.

Display Precedure:

1. Press the I/⏻ button to turn on the power.
2. Press the FUNCTION button to select the "MD" function.
3. While pressing the ■ button and the REC MODE button at the same time, press the ⏏ (MD) button.
4. Press the ▶▶I "R" button to display "[Service]". Then press the ENTER/YES "R" button.
5. Press the ▶▶I "R" button to display "Iop Read" (C26) and press the ENTER/YES "R" button.
6. "@@.@/##.#" is displayed and the recorded contents are displayed.
   @@.@ : indicates the Iop value labeled on the optical pick-up
   ##.# : indicates the Iop value after adjustment
7. To end, press the MENU/NO "R" button to display "Iop Read" (C26). Then press the REPEAT "R" button.
8. Press the I/⏻ button to turn off the power.

Checks Prior to Parts Replacement and Adjustments in MD

Before performing repairs, perform the following checks to determine the faulty locations up to a certain extent.
Details of the procedures are described in "Section 5 Electrical Adjustments".

	Criteria for Determination (Unsatisfactory if specified value is not satisfied)	Measure if unsatisfactory
Laser power check (6-2 : See page 39)	• 0.93 mW power Specified value : 0.84 to 0.92 mW (KMS-262A) 0.90 to 0.96 mW (KMS-262E) • 8.65 mW power Specified value : 8.1 to 8.7 mW (KMS-262A) 8.4 to 8.9 mW (KMS-262E)	• Clean the optical pick-up • Adjust again • Replace the optical pick-up
	• Iop (at 8.65 mW) Labeled on the optical pick-up Iop value ± 10mA	• Replace the optical pick-up
Auto check (6-4 : See page 40)	• Unsatisfactory if displayed as "NG : XXXX" (XXXX are arbitrary numbers)	• Replace the optical pick-up
Temperature compensation offset check (6-1 : See page 39)	• Unsatisfactory if displayed as "T=@@ (##) [NG]" (@@, ## are both arbitrary numbers)	• Check for disconnection of the circuits around D101 (BD (MD) board) • Check the signals around IC101, IC151, CN102, CN103 (BD (MD) board)

Note:
The criteria for determination above is intended merely to determine if satisfactory or not, and does not serve as the specified value for adjustments.
When performing adjustments, use the specified values for adjustments.

SECTION 2
GENERAL

This section is extracted from instruction manual.

Main unit

ALPHABETICAL ORDER

A – L

DIRECTION 18 (16, 40, 41)
Disc tray 9
DISPLAY 19 (9, 13, 39, 46, 47, 50)
Display window 3
ENTER/START 14 (15, 16, 40, 57)
FM MODE/REPEAT 17 (8, 12, 37, 38)
FUNCTION 21 (7, 8, 9, 11, 12, 13, 17, 18, 19, 20, 21, 25, 27, 28, 29, 31, 32, 33, 34, 40, 41, 49, 53)

M – Z

MD slot 6
NET MD 10 (51)
PHONES jack 20
REC MODE 15 (15, 17, 18, 22)
Remote sensor 2
SYNCHRO MODE 16 (15, 16, 40)
TUNER BAND 5 (36, 37)
TUNING +/– 23 (36, 37)
TUNING MODE/PLAY MODE 18 (7, 8, 11, 12, 23, 34, 36, 37)
VOLUME 8 (43, 50)

BUTTON DESCRIPTIONS

I/⏻ (power) 1 (6, 15, 23, 37, 43, 57)
TAPE ◄► (play) 4 (40)
⏏ MD (eject) 6 (11, 15, 23)
⏏ PUSH OPEN/CLOSE (open/close) 7 (16, 39)
⏏ CD (eject) 9 (7)
● MD (record) 11 (17)
● TAPE (record) 12 (41)
❚❚ TAPE (pause) 13 (40, 41)
■ (stop) 22 (7, 11, 16, 40, 50, 57)
◄◄/►► (rewind/fast forward) 23 (7, 11, 36, 40)
⏮/⏭ (go back/go forward) 23 (7, 11, 19, 25, 37, 42, 43, 50)
MD ►❚❚ (play pause) 24 (11, 17)
CD ►❚❚ (play pause) 25 (7, 18)

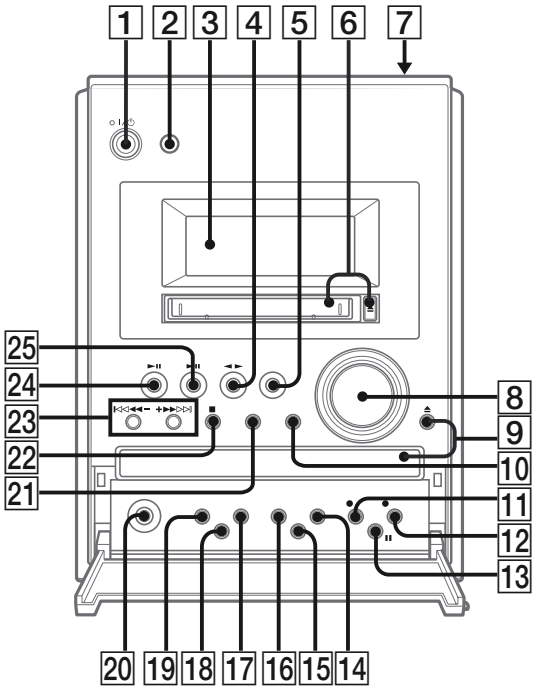

Remote control

ALPHABETICAL ORDER

A – L

BASS/TRE 9 (42)
CLEAR 4 (9, 10, 13, 25, 38)
CLOCK/TIMER SELECT 27 (43, 44)
CLOCK/TIMER SET 28 (6, 43, 44)
DISPLAY 25 (9, 13, 39, 46, 47, 50)
DSG 10 (42)
ENTER/YES 18 (6, 8, 10, 12, 19, 21, 25, 27, 28, 29, 31, 32, 33, 34, 36, 38, 43, 44, 49)
FM MODE 2 (37, 38)
FUNCTION 13 (7, 8, 9, 11, 12, 13, 17, 18, 19, 20, 21, 25, 27, 28, 29, 31, 32, 33, 34, 40, 41, 49, 53)
GROUP 16 (13, 16, 17, 18, 23, 25, 27, 28)
GROUP SKIP 17 (13, 16, 17, 18, 25, 28)

M – Z

MENU/NO 26 (10, 19, 20, 21, 23, 26, 27, 28, 29, 31, 32, 33, 34, 36, 38)
NAME EDIT/SELECT 15 (9, 25, 38, 49)
Number buttons 19 (8, 9, 12, 25, 37)
PLAY MODE 11 (7, 8, 11, 12, 23, 34)
REPEAT 8 (8, 12)
SCROLL 20 (10, 26, 47)
SLEEP 29 (42)
TUNER BAND 6 (36, 37)
TUNING MODE 3 (36, 37)
VOL +/– 22 (43, 50)

BUTTON DESCRIPTIONS

I/⏻ (power) 1 (6, 15, 23, 43)
+/– 5 (36, 37)
⏮/⏭ 5 (6, 7, 11, 19, 25, 42, 43, 50)
CD ►II 7 (7, 18)
MD ►II 12 (11, 17)
◄◄/►► 14 (7, 11)
←CURSOR/CURSOR→ 14 (6, 9, 25)
TAPE ◄► 21 (40)
MD ● 23 (17)
■ 24 (7, 11, 16, 40, 50)

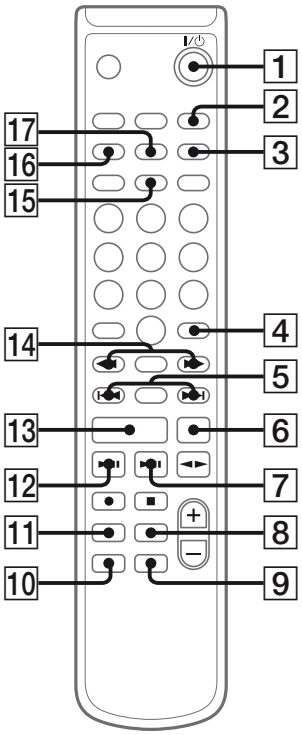

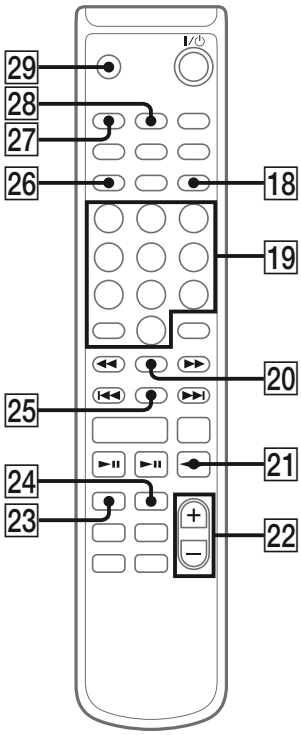

SECTION 3
DISASSEMBLY

• The equipment can be removed using the following procedure.

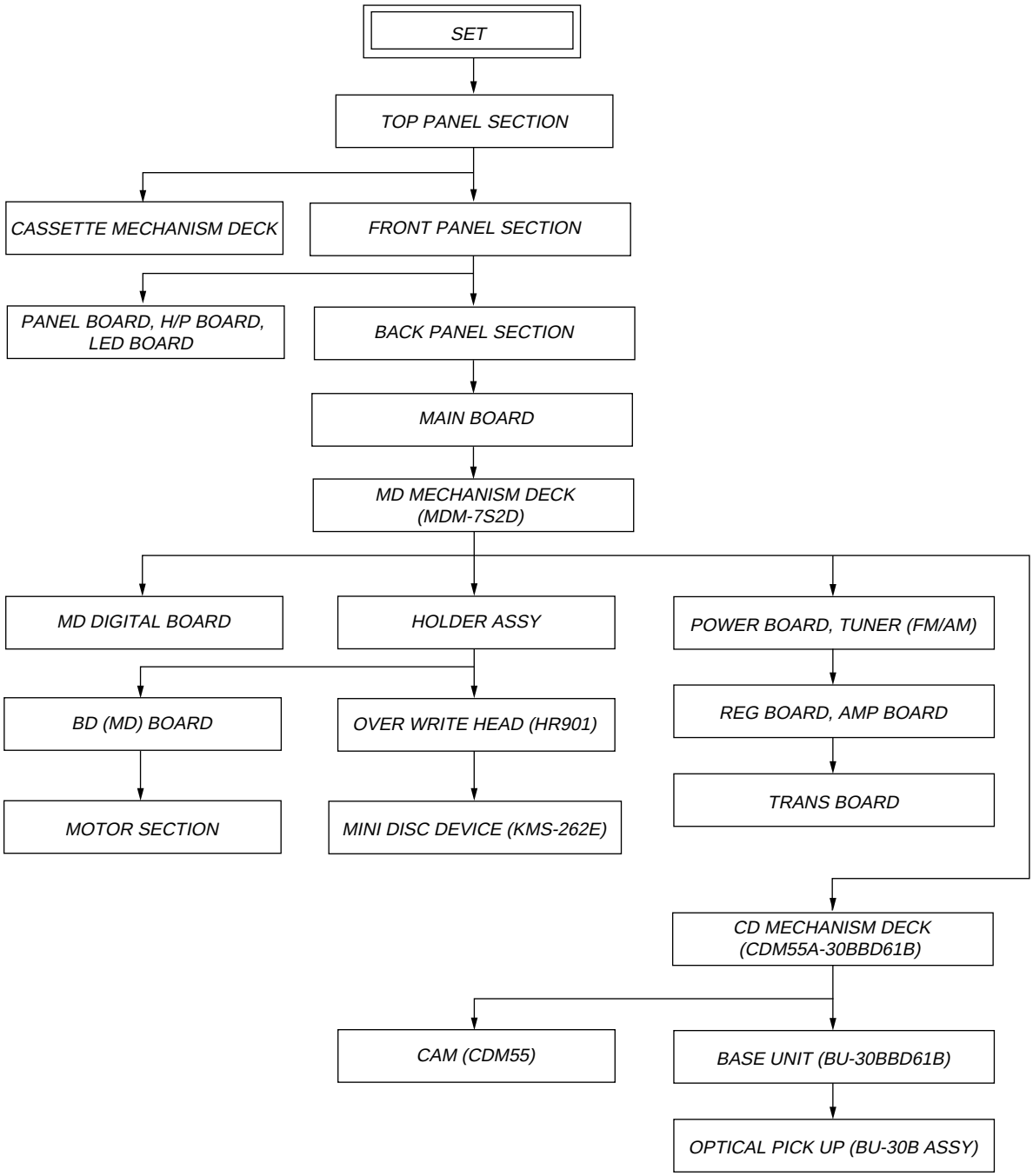

Note: Follow the disassembly procedure in the numerical order given.

3-1. Top Panel Section

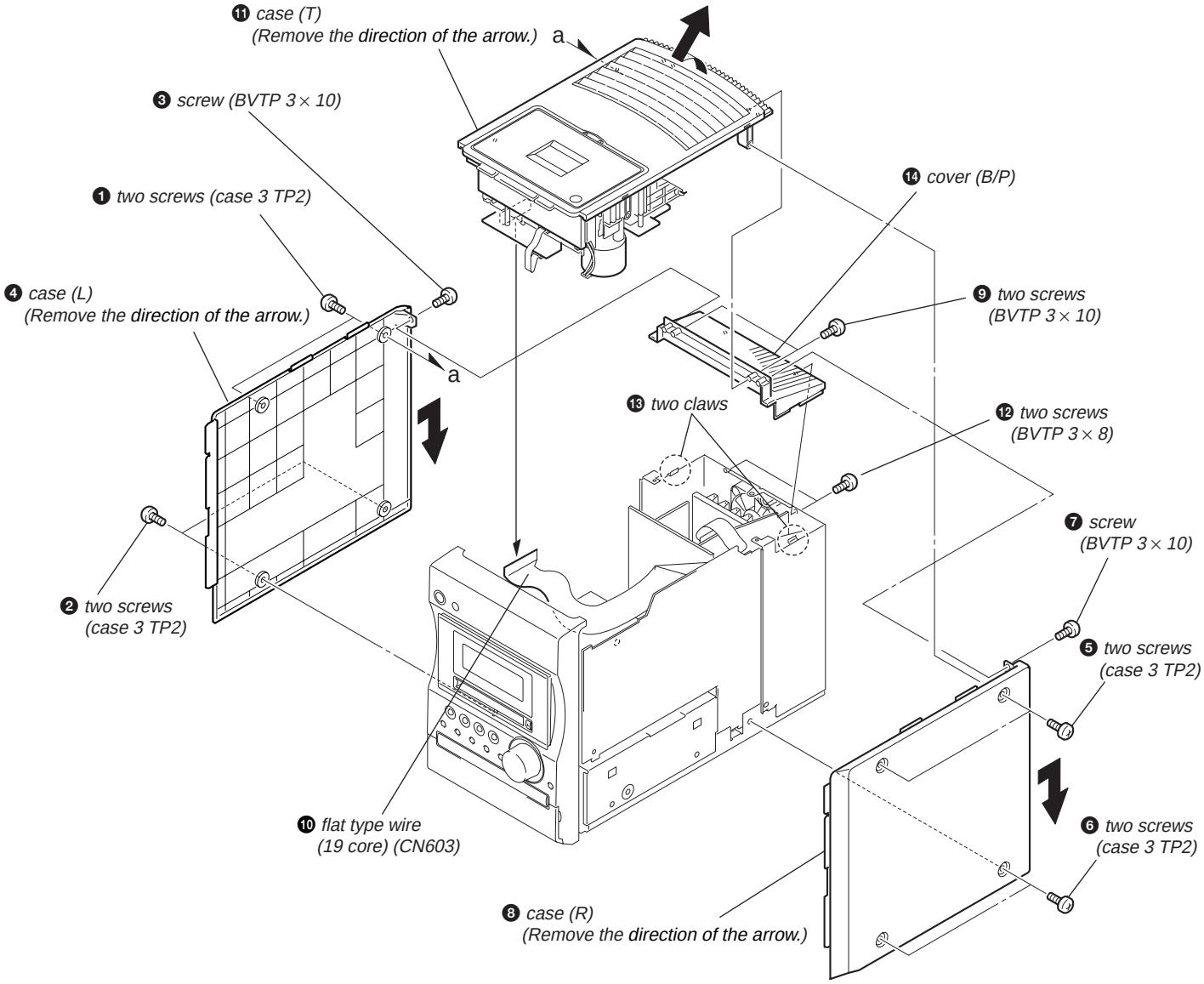

3-2. Cassette Mechanism Deck

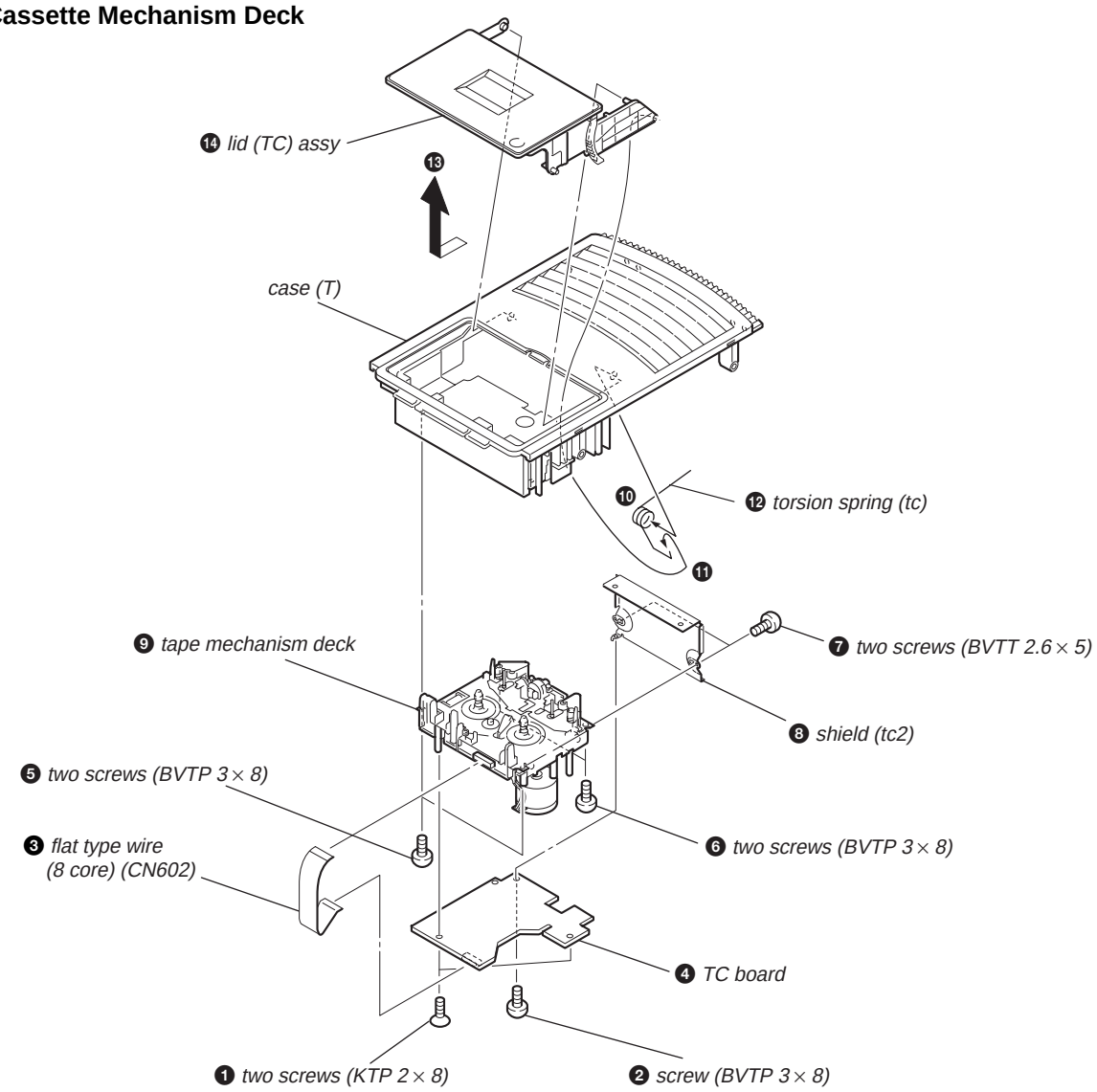

3-3. Front Panel Section

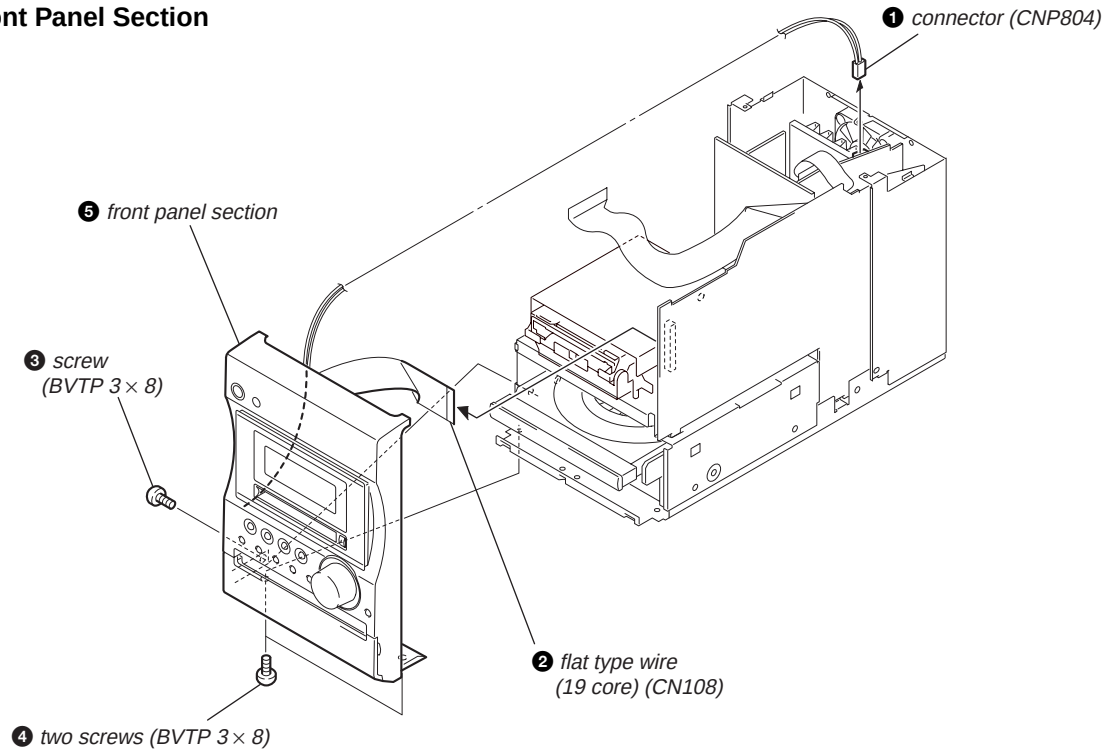

3-4. PANEL Board, H/P Board, LED Board

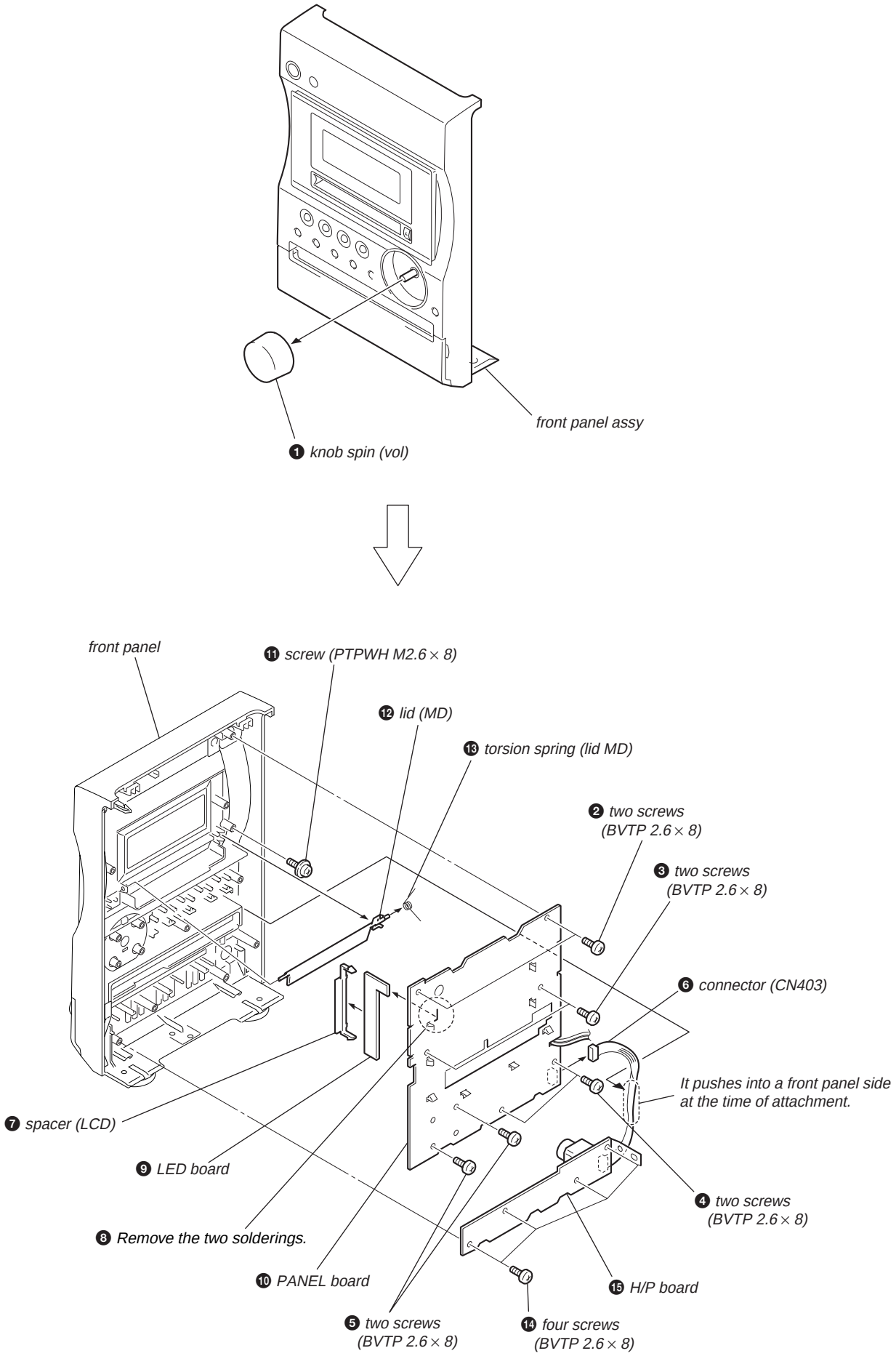

3-5. Back Panel Section

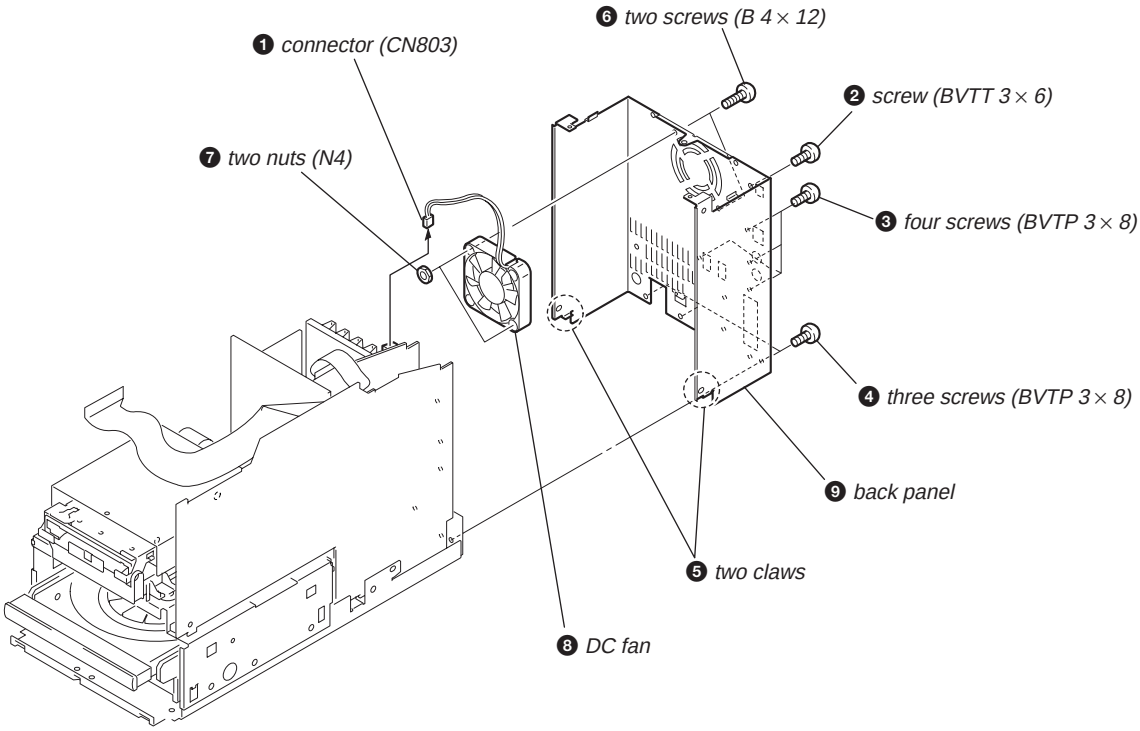

3-6. MAIN Board

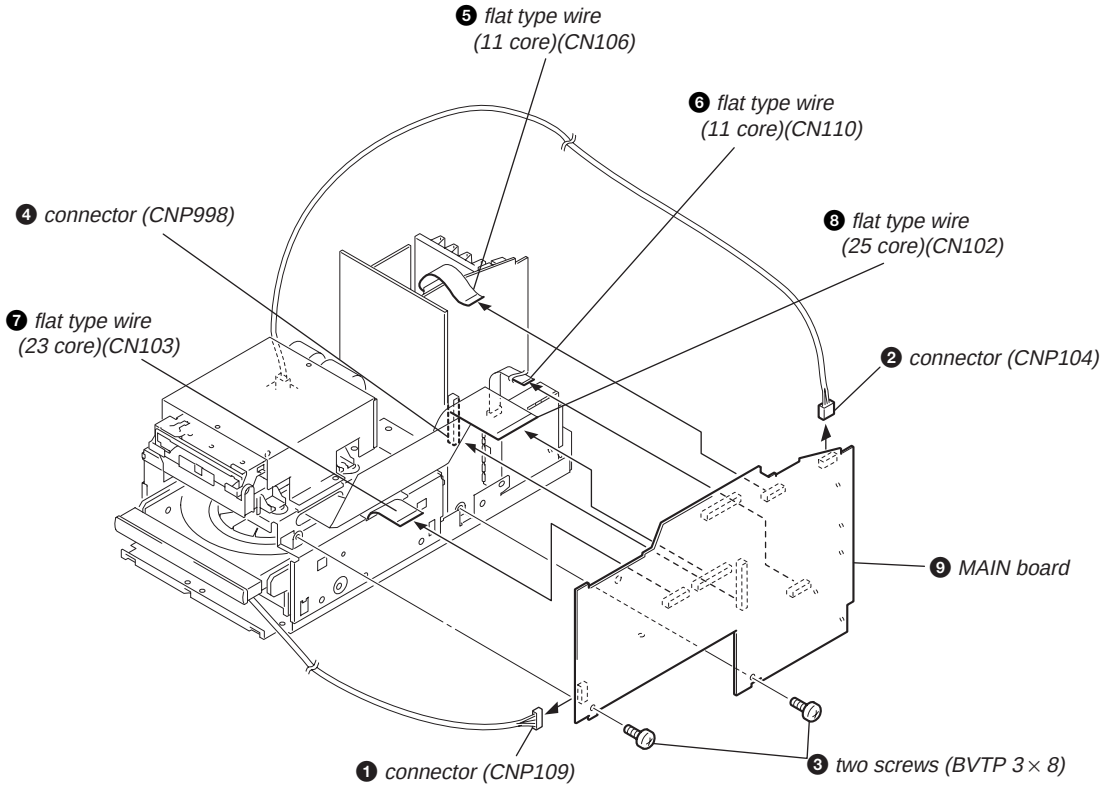

3-7. MD Mechanism Deck (MDM-7S2D)

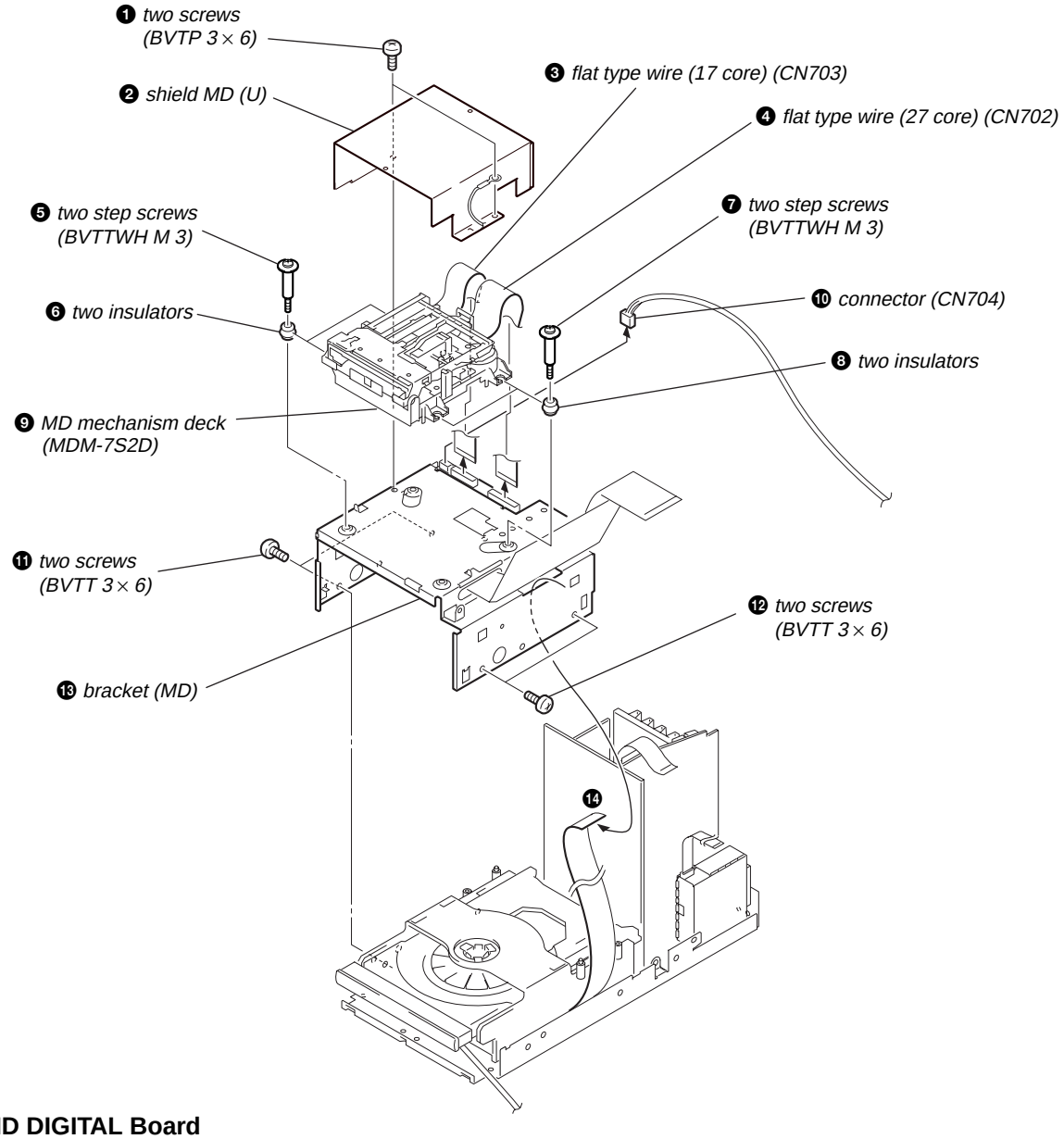

3-8. MD DIGITAL Board

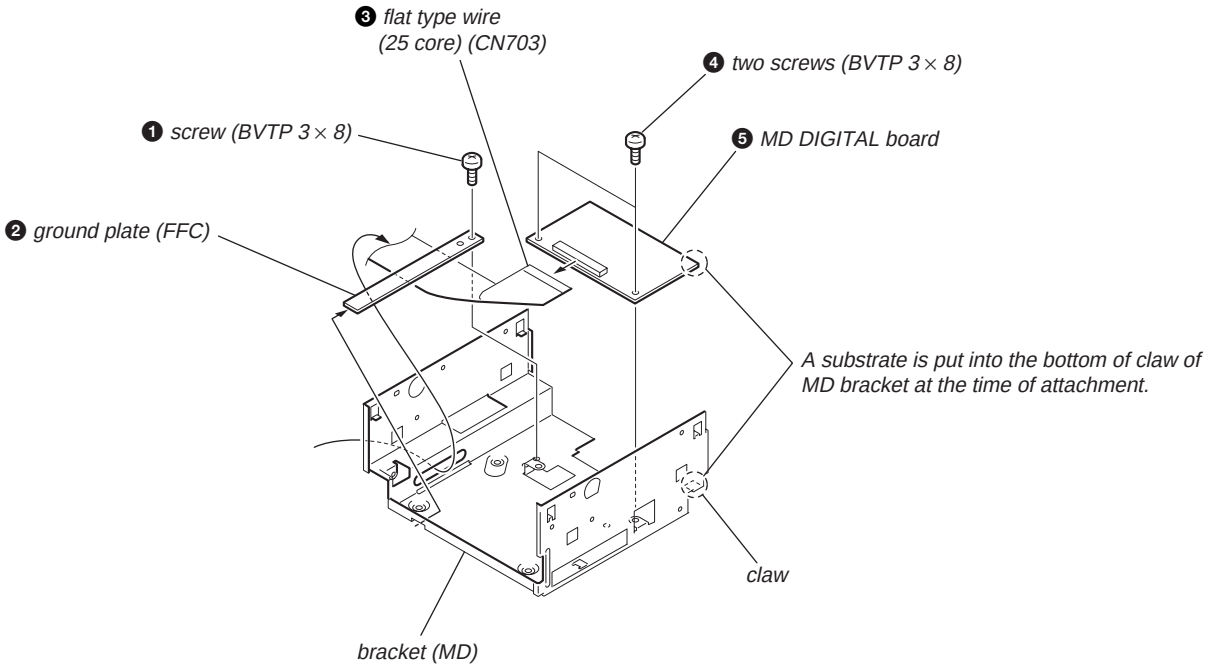

3-9. Holder Assy

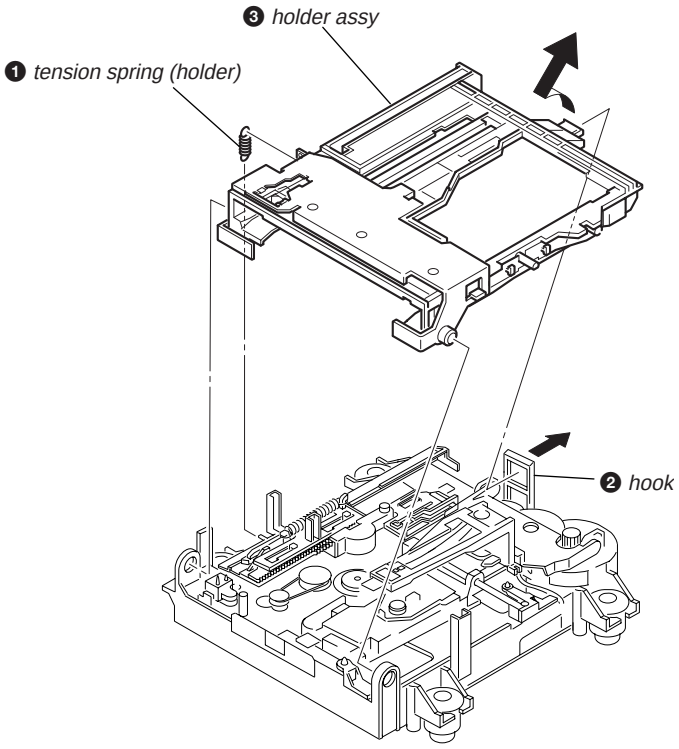

3-10. BD (MD) Board

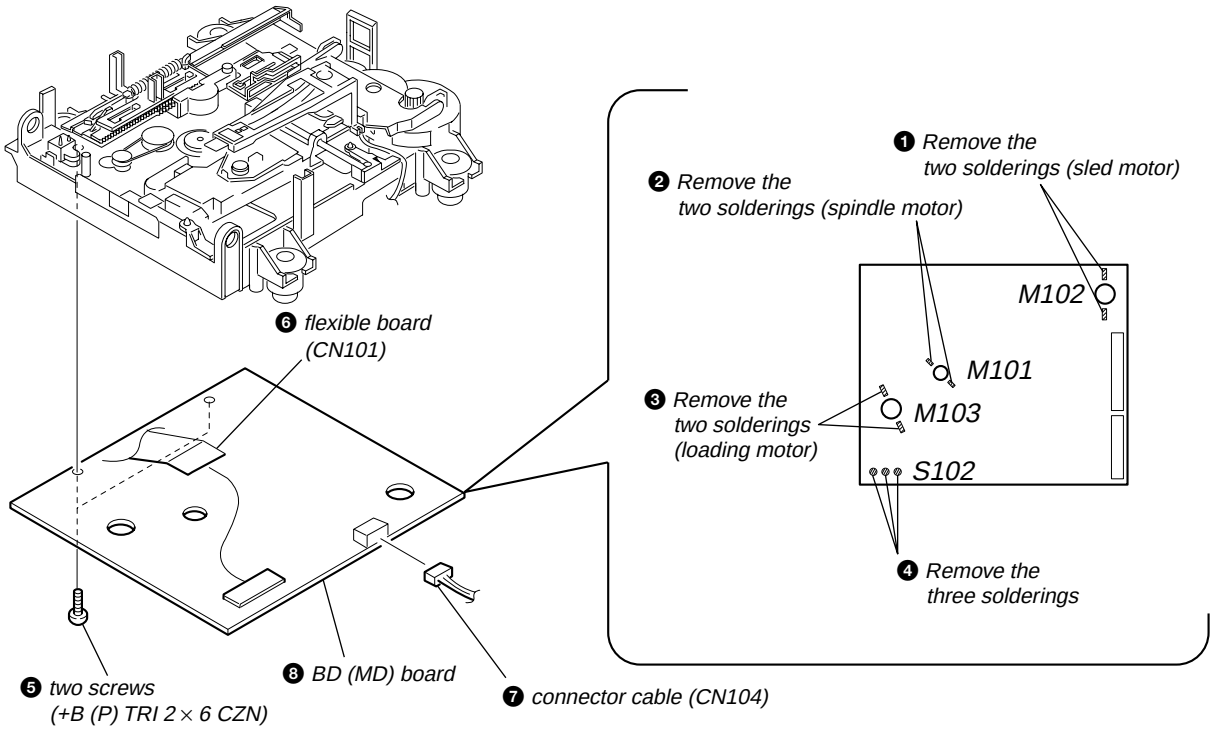

3-11. Motor Section

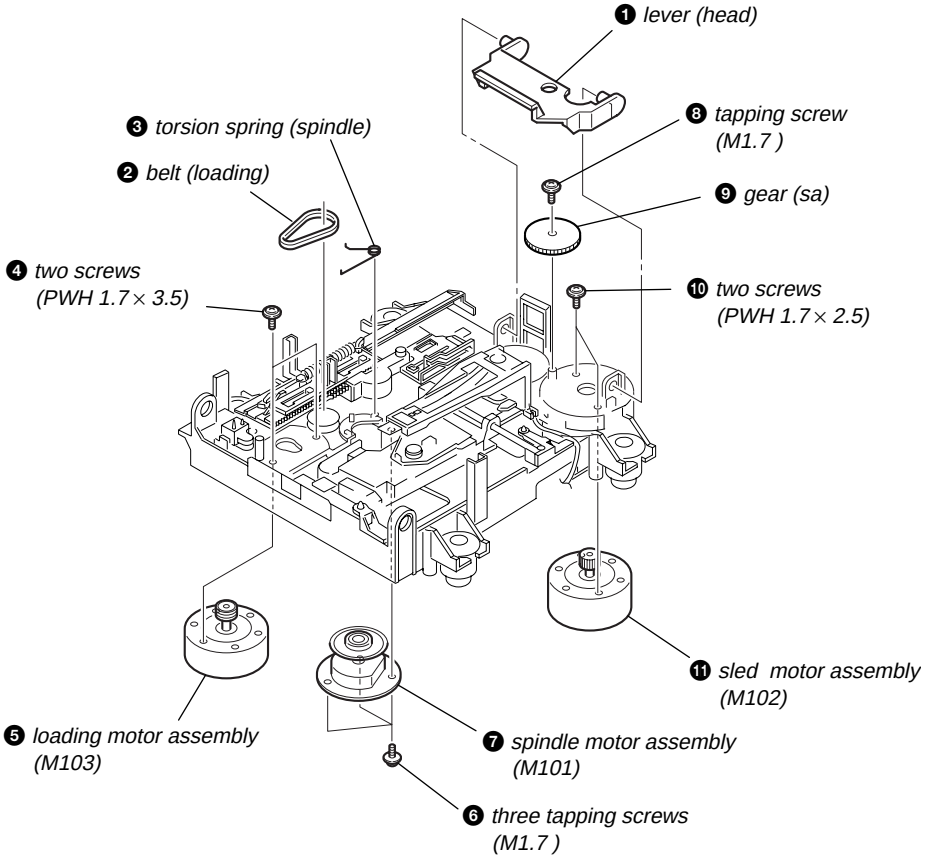

3-12. Over Write Head (HR901)

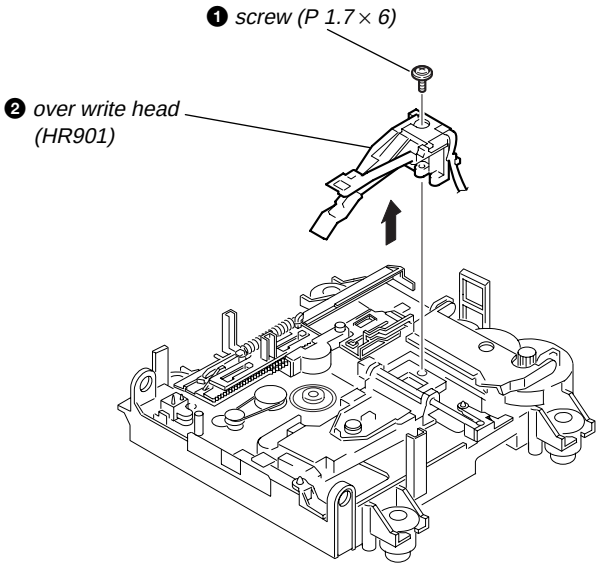

3-13. Mini Disc Device (KMS-262E)

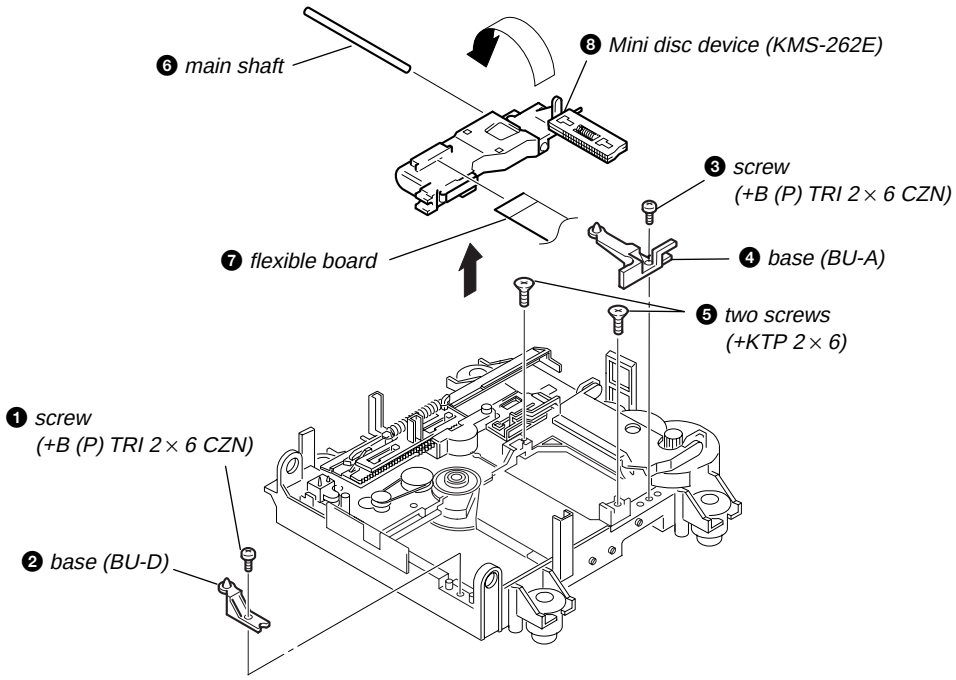

3-14. POWER Board, Tuner (FM/AM)

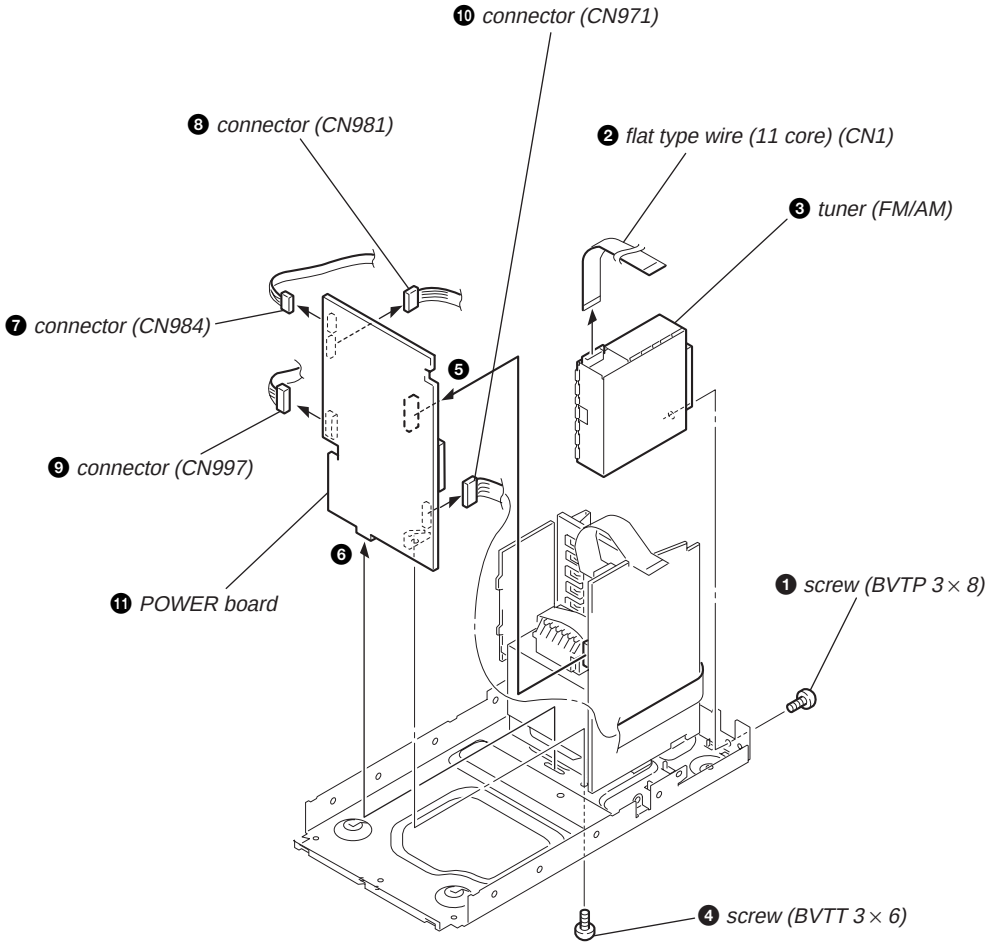

3-15. REG Board, AMP Board

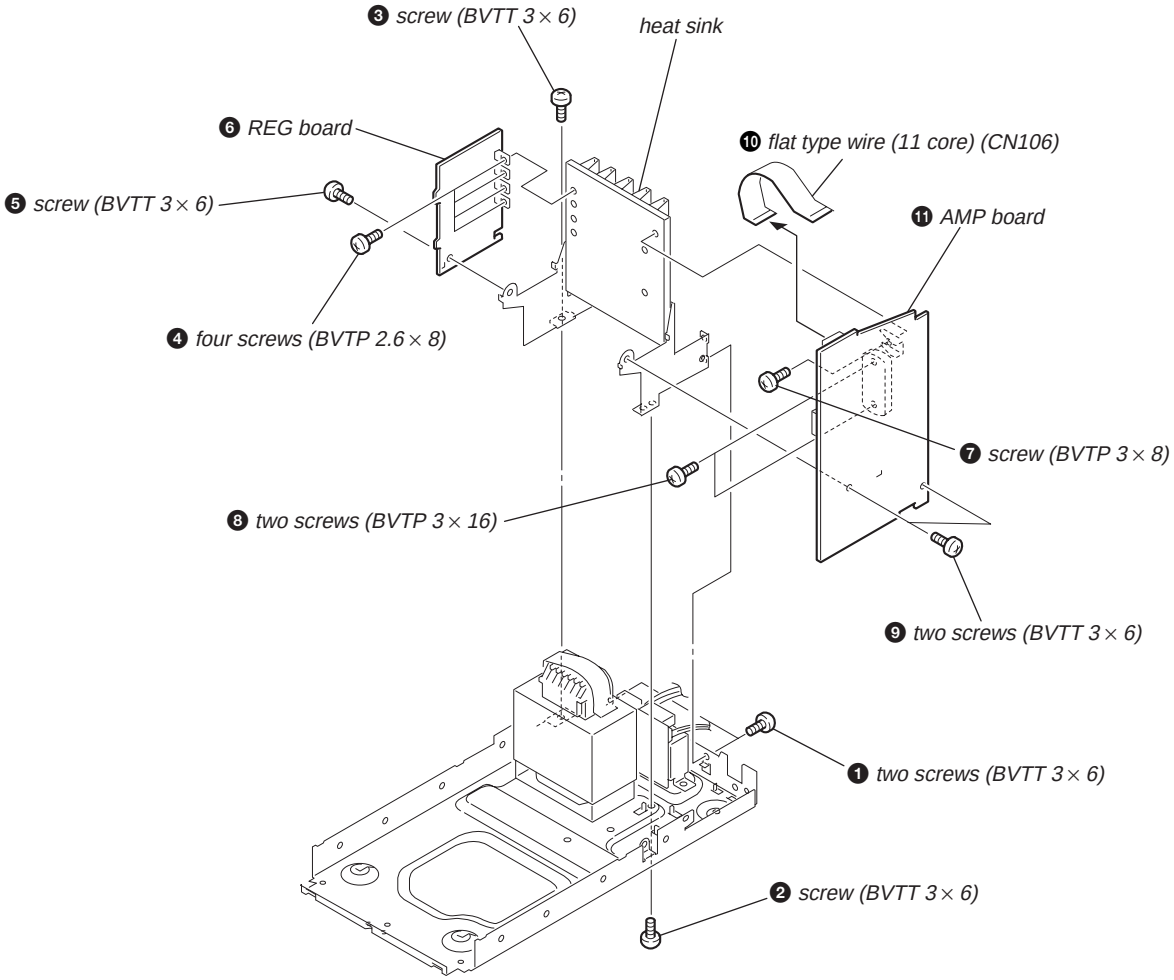

3-16. TRANS Board

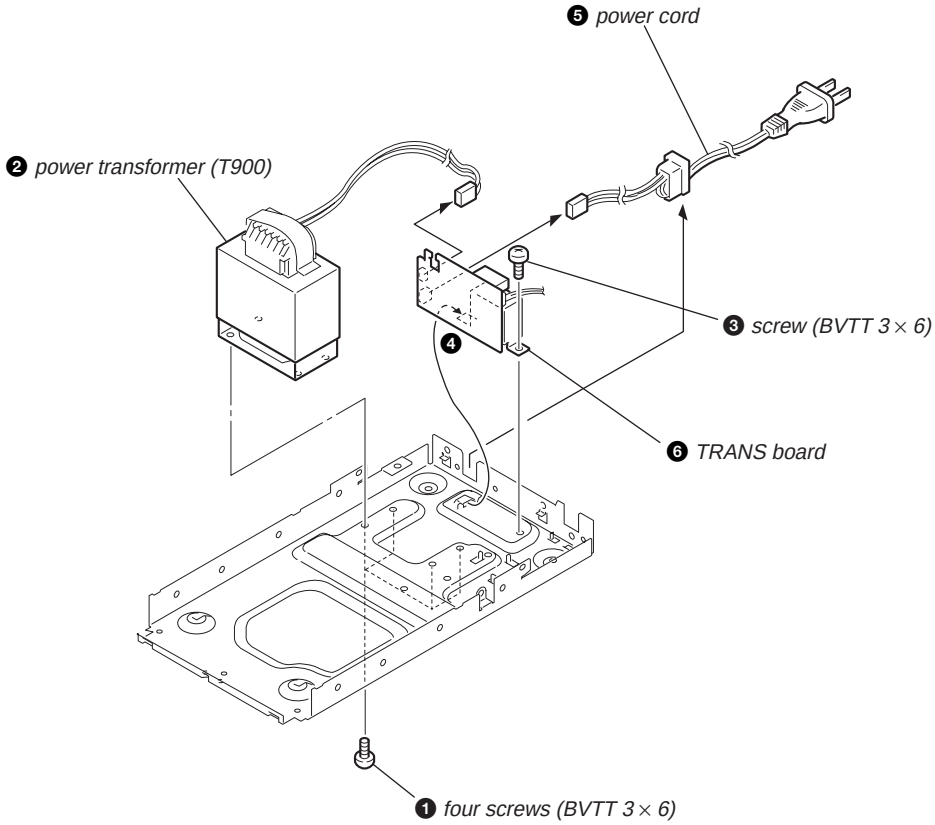

3-17. CD Mechanism Deck (CDM55A-30BBD61B)

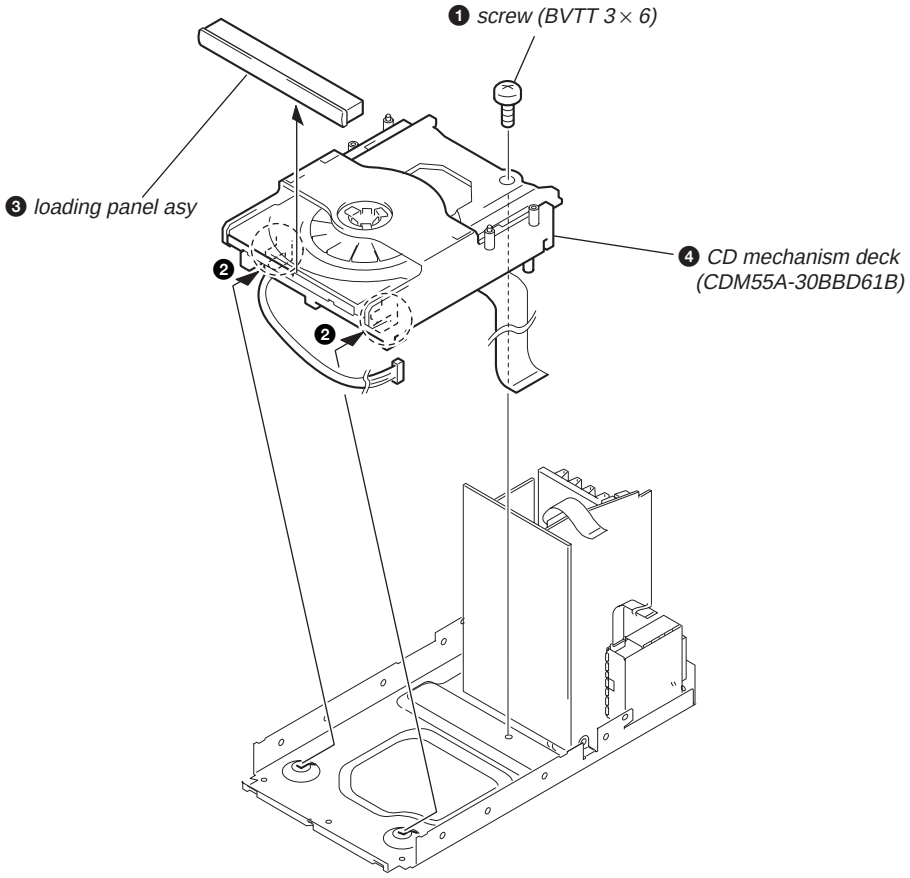

3-18. Cam (CDM55)

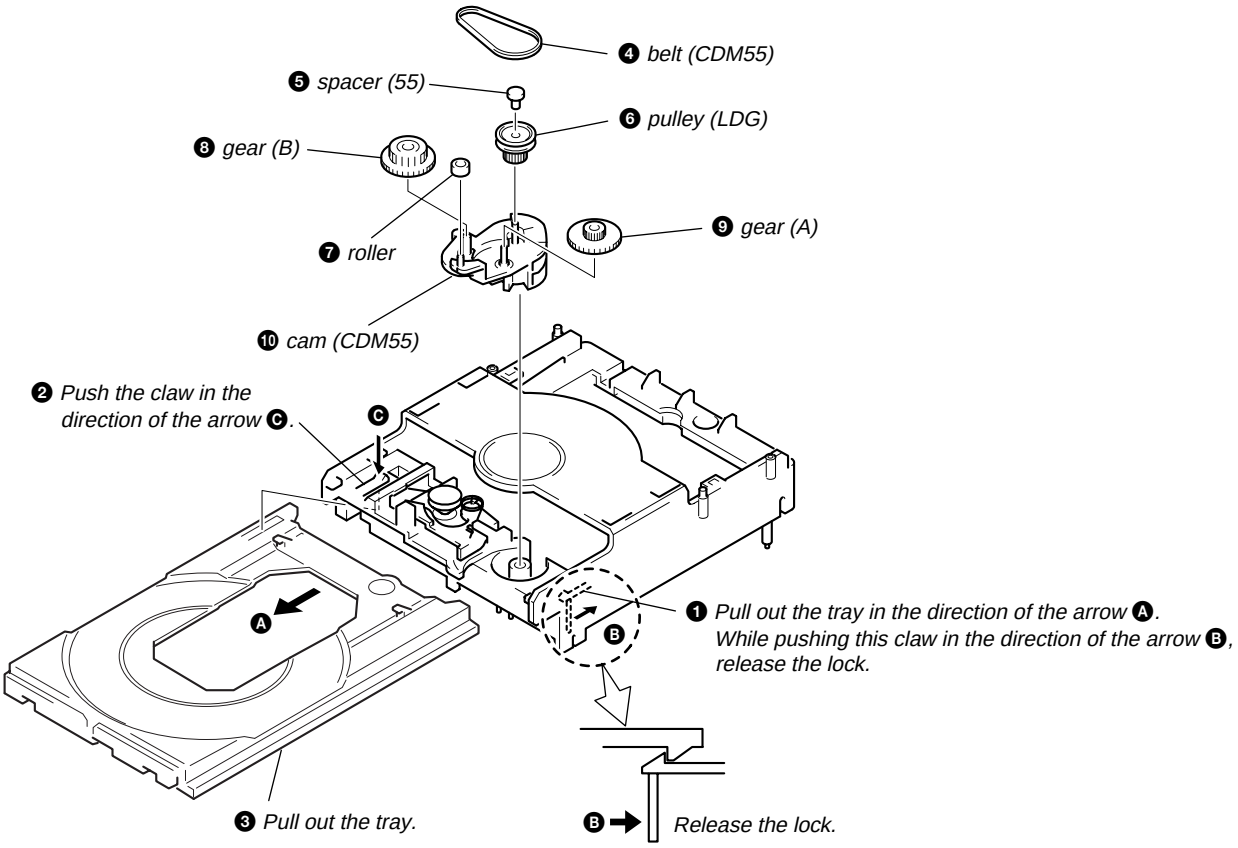

3-19. Base Unit (BU-30BBD61B)

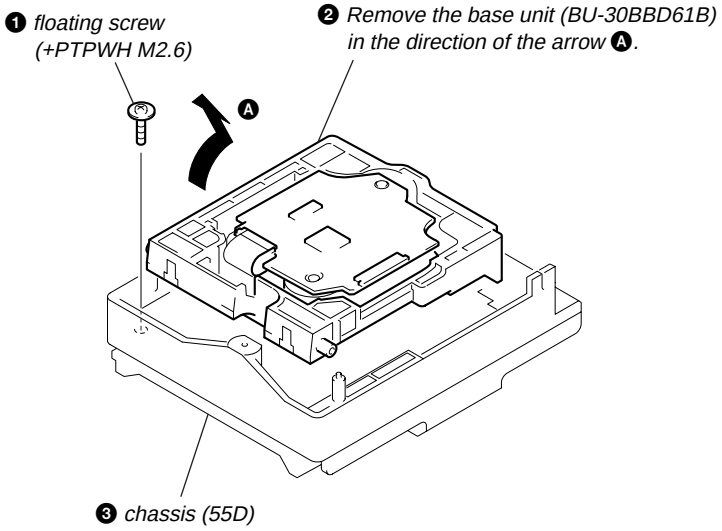

3-20. Optical Pick Up (BU-30B Assy)

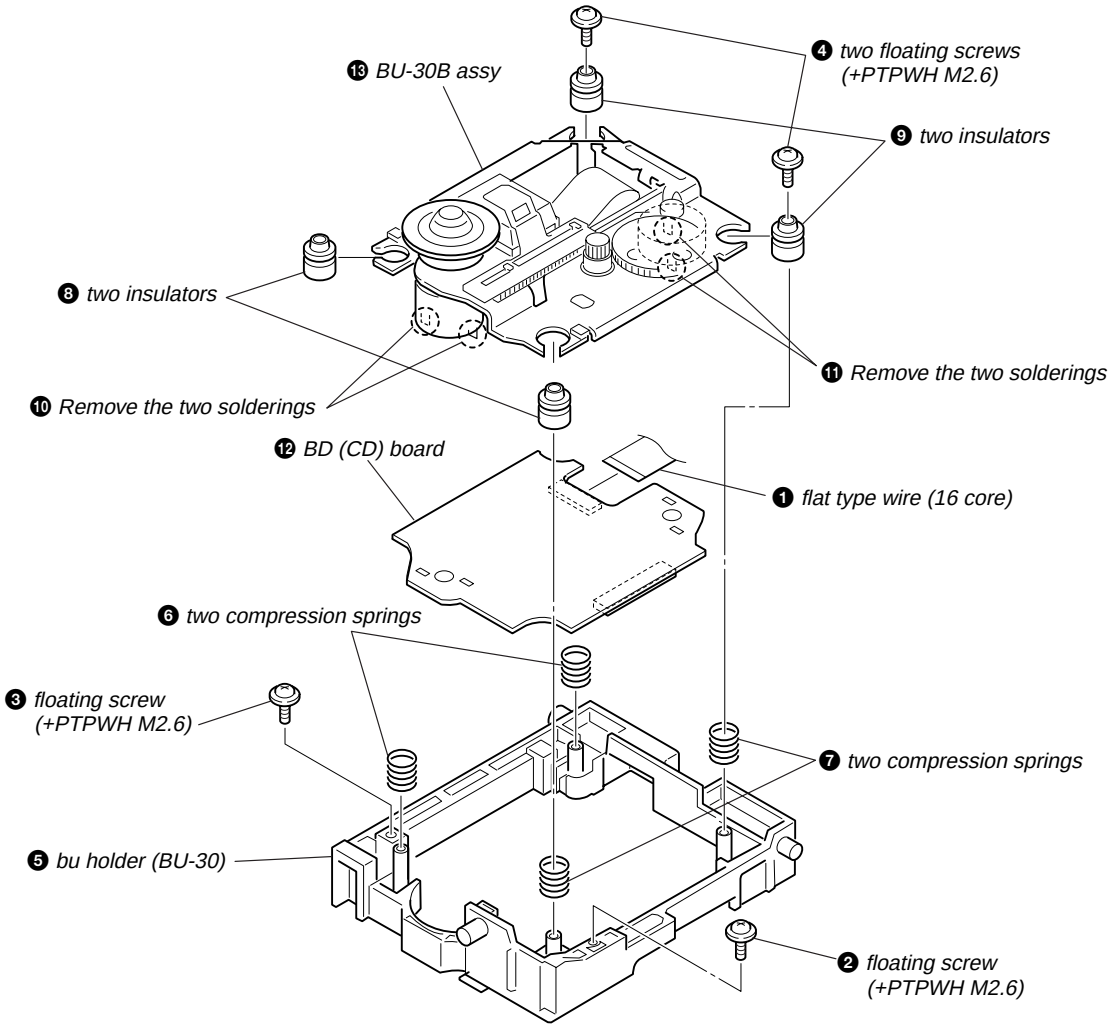

SECTION 4
TEST MODE

Note 1: About "R"
As this unit has only a few buttons, some operations require the use of remote commander (RM-SM100W/provided with unit) buttons. These operations are indicated as "R" in this manual.
Example: MENU/NO "R" ...Press the MENU/NO button of the remote commander.
Note 2: Incorrect operations may be performed if the test mode is not entered properly.
In this case, press the I/⏻ button to turn the power off, and retry to enter the test mode.

1. Cold Reset

- The cold reset clears all data including preset data stored in the RAM to initial conditions. Execute this mode when returning the set to the customers.

Procedure:

1. Press the I/⏻ button to turn the power on.
2. Press three buttons ■ , ENTER/START and I/⏻ simultaneously.
3. When this button is operated, all of the settings are reset. Then the POWER is turned off and the watch display appears.

2. Panel Test Mode

- This mode is used to check the software version, LCD, LED and keyboard.

Procedure:

1. Press the I/⏻ button to turn on the power.
2. Press the FUNCTION button to enter mode other than "TUNER".
3. Press three bottons ■, ENTER/START and TUNER/BAND simultaneously.
4. When the panel test mode is activated, LEDs and LCD segments are all turned on.

2-1. Version check

1. When entering panel test mode, press the FM MODE/REPEAT button. The model name ("M333NT") and destination are displayed, and the MD , CD and TAPE segments flash.
2. Each time the FM MODE/REPEAT button is pressed, the display changes "MC, GC, CD, CDD, CDMA, CDMB, BDA, BDB, ST, TA, TM, TC and MD" (returns to MC) in this order, and returns to the top of the version display.
3. When the REC MODE button is pressed while the version numbers are being displayed, year, month and day of the software creation appear. When the REC MODE button is pressed again, the display returns to the software version display.When the FM MODE/REPEAT button is pressed while year, month and day of the software creation are being displayed, the year, month and day of creation of the software versions are displayed in the same order of version display.

2-2. Key check

1. Press the TUNING MODE/PLAY MODE button, and the key check mode is activated. In the key check mode, the LCD displays "K 0 J 0 V 0". Each time a button is pressed, "K 0" value increases. However, once a button is pressed, it is no longer taken into account. It is end at "K21J 0V 0".
   A turn of VOLUME knob changes value of "V" between 0 and 9. If it turns to the right, a value will increase, and if it turns to the left, a value will decrease.
2. To exit from this mode, press three buttons in the same manner as step 3, or disconnect the power cord.

3. Common Test Mode

Procedure:

1. Press the I/⏻ button to turn the power on.
2. Press three buttons ■, ENTER/START and TAPE ◀▶ simultaneously.
3. The set goes to the common test mode and the MD and TAPE segments flash.

3-1. Amp Test Mode

1. In the common test mode, every time you press the BASS/TRE "R" button, the following items changes in the order as shown below.

   "TONE MAX" (BASS/TRE MAX, VOL MAX)
   ↓
   "TONE MIN" (BASS/TRE MIN, VOL MAX)
   ↓
   "TONE FLAT" (BASS/TRE FLAT, VOL MAX)

2. When the VOLUME knob is turn clockwise or VOLUME + "R" button is pressed, VOLUME goes MAX.
3. When the VOLUME knob is turn counterclockwise or VOLUME – "R" button is pressed, VOLUME goes MIN.
4. To exit from this mode, press the I/⏻ button or disconnect the power cord.

3-2. Tape Test

1. Check the set is in the common test mode.
2. Insert a recordable cassette tape.
3. Input audio signal into the analog input (SJ302).
4. Press the ● TAPE button.
5. Select the recording direction with the TAPE ◀▶ button.
6. Press the ❚❚ TAPE button to start recording.
7. When the ⏮◀◀ – or + ▶▶⏭ button knob against the tape recording direction is pressed, the tape returns to the recording started point and the set starts playback.
8. To exit from this mode, press the I/⏻ button or disconnect the power cord.

4. CD Ship Mode (Setting the Position for Transportation)

1. Press the I/⏻ button to turn the power on.
2. Press the FUNCTION to change the function to “CD”.
3. Press two buttons ■ , ENTER/START and press the CD ▶II button simultaneously.
4. The CD mechanism goes to the transportation mode.
5. When “LOCK” is displayed, disconnect the power cord.
6. The lock is released when the power turns on next.

5. Ship Mode (Setting the Position for Transportation)

This mode is the combination of CD SHIP mode and Cold reset.
In this mode, the MD reset is not activated.

1. Press the I/⏻ button to turn the power on.
2. Press three buttons ■ , ENTER/START and press the MD ▶II button simultaneously.
3. When “LOCK” is displayed, disconnect the power cord.
4. The lock is released when the power turns on next.

6. Disc Tray Lock

The disc tray lock function for the antitheft of a demonstration disc in the store is equipped.

Procedure:

1. Press the I/⏻ button to turn the set on.
2. Select the function “CD”.
3. A disc is put in and a tray is closed.
4. Press two buttons of ■ and ⏏ (CD) simultaneously for five seconds.
5. The message “LOCKED” is displayed and the tray is locked. (Even if turning power on/off, the tray is still locked.)
6. Press two buttons of ■ and ⏏ (CD) simultaneously for five seconds again.
7. The message “UNLOCKED” is displayed and the tray is unlocked.

7. Repeat 5 Times Limit Release Mode

5 times limit of repeating TAPE, MD or CD is released.

Procedure:

1. Press the I/⏻ button to turn the set on.
2. Press three buttons ■ , REC MODE and ⏏ (CD) simultaneously.
3. The message “LIMIT OFF” is displayed, and repeat 5 times limit is released.
4. To exit from this mode, disconnect the power cord.

MD TEST MODE

1. Precautions For Use of Test Mode

- As operations related to loading will be performed regardless of the test mode operations being performed, be sure to check that the disc is stopped before setting and removing it.
  Even if the ⏏ (MD) button is pressed while the disc is rotating during continuous playback, continuous recording, etc., the disc will not stop rotating.
  Therefore, it will be ejected while rotating.
  Be sure to press the ⏏ (MD) button after pressing the MENU/NO "R" button and the rotation of disc is stopped.

1-1. Recording Laser Emission Mode and Operating Buttons

- Continuous recording mode (CREC 2MODE) (C37)
- Laser power check mode (LDPWR CHECK) (C13)
- Laser power adjustment mode (LDPWR ADJUST) (C04)
- Comparison with initial Iop value written in nonvolatile memory (Iop Compare) (C27)
- Write current Iop value in read nonvolatile memory using microprocessor (Iop NV Save) (C06)
- Traverse (MO) check (EF MO CHECK) (C14)
- Traverse (MO) adjustment (EF MO ADJUST) (C07)
- When pressing the ● MD button.

2. Setting the Test Mode

Procedure : 1. Press the I/⏻ button to turn the power on.
2. Press the FUNCTION button to enter "MD" mode.
3. Press three buttons of ■ , REC MODE and ⏏ (MD) simultaneously.
When the test mode is set, "[Check]" will be displayed. Pressing the ⏮ "R" or ⏭ "R" button between the following three groups; ···⟷ [Check] ⟷ [Service] ⟷ [Develop] ⟷ ···.

Note: Do not use the test mode in the [Develop] group.
If used, the unit may not operate normally.
If the [Develop] group is set accidentally, press the MENU/NO "R" button immediately to exit the [Develop] group.

3. Releasing the Test Mode

Press the REPEAT "R" button once or press the FM/MODE/REPEAT button and press the I/⏻ button to turn the power off, the set goes to the standby mode.

4. Basic Operations of the Test Mode

All operations are performed using the ⏮ "R", ⏭ "R", ENTER/YES "R", MENU/NO "R" and TIMER SET buttons.
The functions of these buttons are as follows.

Function name	Function
ENTER/YES "R" button	Proceeds onto the next step. Finalizes input
MENU/NO "R" button	Returns to previous step. Stops operations
⏮ "R", ⏭ "R" buttons	Changes parameters and modes
TIMER SET button	Selects the sub menu

5. Selecting the Test Mode

There are 26 types of test modes as shown below. The groups can be switched by pressing the ⏮ "R" or ⏭ "R" button. After selecting the group to be used, press the ENTER/YES "R" button. After setting a certain group, pressing the ⏮ "R" or ⏭ "R" button switches modes shown below.
Refer to "Group" in the table for details can be selected.
All items used for servicing can be treated using group [Service]. So be carefully not to enter other groups by mistake.

Note: Do not use the test mode in the [Develop] group.
If used, the unit may not operate normally.
If the [Develop] group is set accidentally, press the MENU/NO "R" button immediately to exit the [Develop] group.

Display	No.	Details	Mark	Group	
				Check	Service
AUTO CHECK	C01	Automatic self-diagnosis			○
Err Display	C02	Error history display, clear			○
TEMP ADJUST	C03	Temperature compensation offset adjustment			○
LDPWR ADJUST	C04	Laser power adjustment			○
Iop Write	C05	Iop data writing			○
Iop NV Save	C06	Writes current Iop value in read nonvolatile memory using microprocessor			○
EF MO ADJUST	C07	Traverse (MO) adjustment			○
EF CD ADJUST	C08	Traverse (CD) adjustment			○
FBIAS ADJUST	C09	Focus bias adjustment			○
AG Set (MO)	C10	Auto gain output level adjustment (MO)			○
AG Set (CD)	C11	Auto gain output level adjustment (CD)			○
TEMP CHECK	C12	Temperature compensation offset check		○	○
LDPWR CHECK	C13	Laser power check		○	○
EF MO CHECK	C14	Traverse (MO) check		○	○
EF CD CHECK	C15	Traverse (CD) check		○	○
FBIAS CHECK	C16	Focus bias check		○	○
ScurveCHECK	C17	S-curve check	×	○	
VERIFYMODE	C18	Nonvolatile memory check	×	○	
DETRK CHECK	C19	Detrack check	×	○	
0920 CHECK	C25	Most circumference check	×	○	
Iop Read	C26	Iop data display		○	○
Iop Compare	C27	Comparison with initial Iop value written in nonvolatile memory		○	○
ADJ CLEAR	C28	Initialization of nonvolatile memory for adjustment values			○
INFORMATION	C31	Display of microprocessor version, etc.		○	○
CPLAY 2MODE	C36	Continuous playback mode		○	○
CREC 2MODE	C37	Continuous recording mode		○	○

- For details of each adjustment mode, refer to “Section 5 Electrical Adjustments”.
  About “Err Display” (C02), please refer to a page 7 self-diagnostic function.
- If a different mode has been selected by mistake, press the MENU/NO “R” button to release that mode.
- Modes with (×) in the Mark column are not used for servicing and therefore are not described in detail. If these modes are set accidentally, press the MENU/NO “R” button to release the mode immediately.

5-1. Operating the Continuous Playback Mode

1. Entering the continuous playback mode
   (1) Set the disc in the unit. (Whichever recordable discs or discs for playback only are available)
   (2) Press the ⏮ “R” or ⏭ “R” button to display “CPLAY 2MODE” (C36).
   (3) Press the ENTER/YES “R” button to change the display to “CPLAY2MID”.
   (4) When access completes, the display changes to “C = ⬚⬚⬚⬚ AD = ⬚⬚)”.
   Note: The numbers “ ⬚ ” on the display show you error rates and ADER.
2. Changing the parts to be played back
   (1) Press the ENTER/YES “R” button during continuous playback to change the display as below.

   “CPLAY 2MID” → “CPLAY 2OUT” → “CPLAY 2IN”

   When pressed another time, the parts to be played back can be moved.
   (2) When access completes, the display changes to “C = ⬚⬚⬚⬚ AD = ⬚⬚)”.
   Note: The numbers “ ⬚ ” on the display show you error rates and ADER.
3. Ending the continuous playback mode
   (1) Press the MENU/NO “R” button. The display will change to “CPLAY 2MODE” (C36).
   (2) Press the ⏏ (MD) button and take out the disc.
   Note : The playback start addresses for IN, MID, and OUT are as follows.
   IN : 40h cluster
   MID : 300h cluster
   OUT : 700h cluster

5-2. Operating the Continuous Recording Mode (Use only when performing self-recording/playback check)

1. Entering the continuous recording mode
   (1) Set a recordable disc in the unit.
   (2) Press the [⏮ "R"] or [⏭ "R"] button to display "CREC 2MODE" (C37).
   (3) Press the [ENTER/YES "R"] button to change the display to "CREC 2MID".
   (4) When access completes, the display changes to "CREC 2(⬚⬚⬚⬚)" and "MD" lights up.
   Note: The numbers " ⬚ " on the displayed show you the recording position addresses.
2. Changing the parts to be recorded
   (1) When the [ENTER/YES "R"] button is pressed during continuous recording, the display changes as below.

   "CREC 2MID" → "CREC 2OUT" → "CREC 2IN"

   When pressed another time, the parts to be recorded can be changed. "MD" goes off.
   (2) When access completes, the display changes to "CREC 2(⬚⬚⬚⬚)" and "MD" lights up.
   Note: The numbers " ⬚ " on the display show you the recording position addresses.
3. Ending the continuous recording mode
   (1) Press the [MENU/NO "R"] button. The display changes to "CREC 2MODE" (C37) and "MD" goes off.
   (2) Press the [⏏] (MD) button and take out the disc.
   Note 1: The recording start addresses for IN, MID, and OUT are as follows.
   IN : 40h cluster
   MID : 300h cluster
   OUT : 700h cluster
   Note 2: The [MENU/NO "R"] button can be used to stop recording anytime.
   Note 3: Do not perform continuous recording for long periods of time above 5 minutes.
   Note 4: During continuous recording, be careful not to apply vibration.

6. Functions of Other Buttons

Function	Contents
MD ► ❚❚	Sets continuous playback when this is pressed in the STOP state. When this is pressed during continuous playback, tracking power servo turns ON/OFF.
■ (MD)	Stops continuous playback and continuous recording
►► "R"	The sled moves to the outer circumference only when this is pressed
◄◄ "R"	The sled moves to the inner circumference only when this is pressed
PLAY MODE/TUNING MODE	Switches the spindle servo mode (CLV S ↔ CLV A)
SCROLL	Switches the pits or grooves each time the button is pressed
⏏ (MD)	Ejects the disc
REPEAT "R" or FM MODE/REPEAT	Releases the test mode
CLEAR"R"	Clears the setting of pits and groove, and judges pits and groove again.
● MD	When it is pressed while servo is turning on, the recording starts from present position.
DISPLAY	Switches the display mode

7. Automatic Self-diagnosis Function

This test mode performs CREC and CPLAY automatically for mainly checking the characteristics of the optical pick-up.
To perform this test mode, the laser power must first be checked.
Perform AUTO CHECK after the laser power check and Iop Compare.

Procedure:

1. Display "AUTO CHECK" and press the [ENTER/YES "R"] button. If "LDPWR ミチェック" is displayed, it means that the laser power check has not been performed. In this case, perform the laser power check and Iop Compare (C27), and then repeat from step1.
2. If a disc is in the mechanical deck, it will be ejected forcibly.
   "DISC IN" will be displayed in this case. Load a test disc (MDW-74/GA-1) which can be recorded.
3. If a disc is loaded at step 2, the check will start automatically.
4. When "XX CHECK" is displayed, the item corresponding to XX will be performed.
   When "06 CHECK" completes, the disc loaded at step 2 will be ejected. "DISC IN" will be displayed. Load the check disc (TDYS-1).
5. When the disc is loaded in step 4, the check will automatically be resumed from "07 CHECK".
6. After completing to "0C CHECK", check OK or NG will be displayed. If all items are OK, "CHK ALL OK" will be displayed. If any item is NG, it will be displayed as "NG:xxxx".

When "CHK ALL OK" is displayed, it means that the optical pick-up is normal. Check the operations of other parts (spindle motor, sled motor, etc.).
When displayed as "NG:xxxx", it means that the optical pick-up is faulty. In this case, replace the optical pick-up.

SECTION 5
ELECTRICAL ADJUSTMENTS

TAPE SECTION **0 dB=0.775V**

1. Demagnetize the record/playback head with a head demagnetizer.
2. Do not use a magnetized screwdriver for the adjustments.
3. After the adjustments, apply suitable locking compound to the parts adjusted.
4. The adjustments should be performed with the rated power supply voltage unless otherwise noted.
5. The adjustments should be performed in the order given in this service manual. (As a general rule, playback circuit adjustment should be completed before performing recording circuit adjustment.)
6. The adjustments should be performed for both L-CH and R-CH.
7. Switches and controls should be set as follows unless otherwise specified.

Tape	Signal	Used for
P-4-A100	10 kHz, –10 dB	Azimuth Adjustment
WS-48B	3 kHz, 0 dB	Tape Speed Adjustment

Note: DSG OFF, TREBLE/BASS CENTER

Record/Playback Head Azimuth Adjustment

Procedure:

1. Mode : Playback

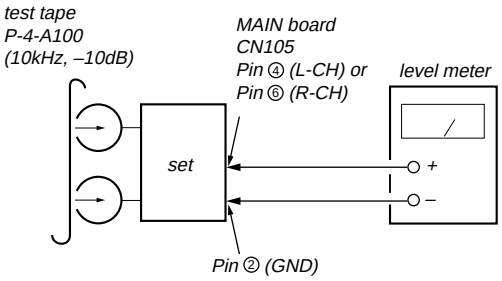

2. Turn the adjustment screw and check output peaks. If the peaks do not match for L-CH and R-CH, turn the adjustment screw so that outputs match within 1 dB of peak.

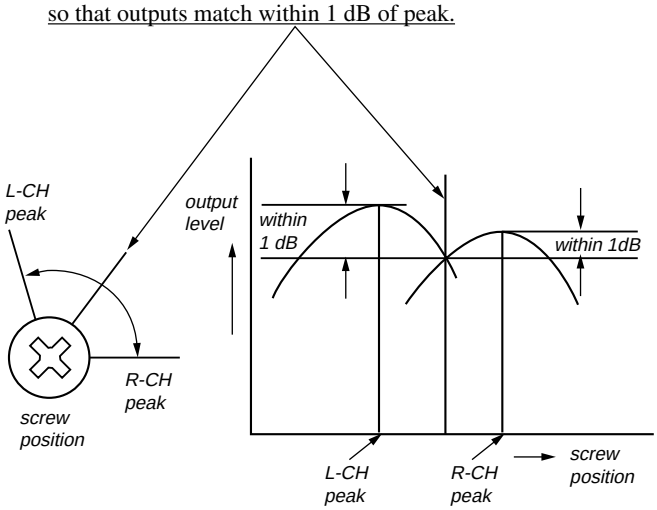

3. Mode: Playback

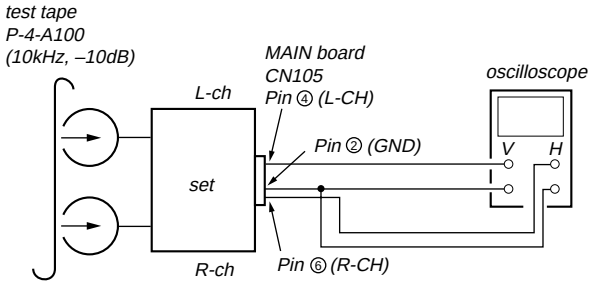

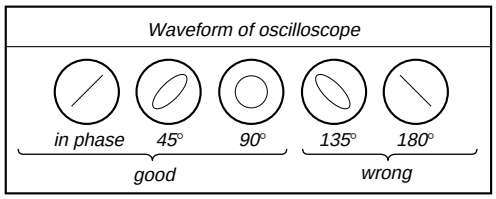

4. After the adjustments, apply suitable locking compound to the parts adjusted.

Adjustment Location: REC/PB Head

Tape Speed Check

Procedure:

1. MODE : FWD Playback.

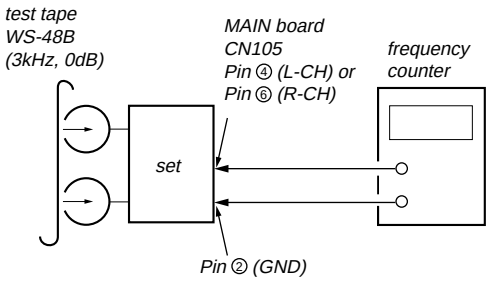

2. Insert the WS-48B into deck.
3. Press the TAPE ◀▶ button of deck.
4. Check the reading of frequency counter becomes 3000 ± 90 Hz.

Sample Value of Wow and flutter

W.RMS (JIS) less than 0.35%
(test tape: WS-48B)

Record Bias Adjustment

Procedure :

1. Press the FUNCTION button to select ANALOG IN.
2. Insert a tape into deck, press the ● TAPE button, and then press the ❚❚ TAPE button to start recording.
3. Mode : Record

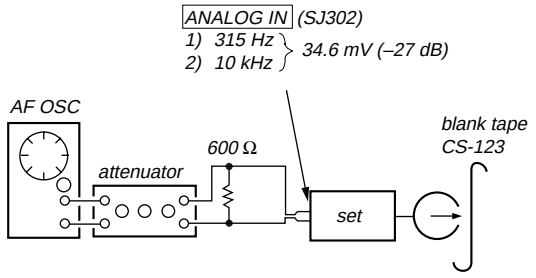

4. Mode : Playback

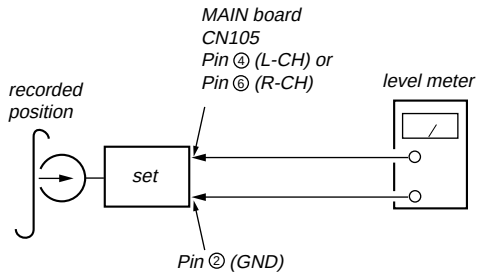

5. Confirm playback the signal recorded in step become adjustment level as follows
   If these levels do not satisfy adjustment level, adjust the RV653 (L-CH) and RV603 (R-CH) on the TC board to repeat steps 3 and 4.

Adjustment level : The playback output of 10kHz level difference against 315Hz reference should be 0 ± 2.0dB.

Adjustment Location :

[MAIN BOARD]

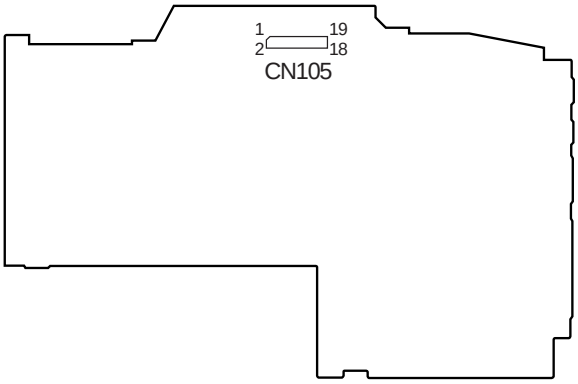

Record Level Adjustment

Procedure :

1. Press the FUNCTION button to select ANALOG IN.
2. Insert a tape into deck, press the ● TAPE button, and then press the ❚❚ TAPE button to start recording.
3. Mode : Record

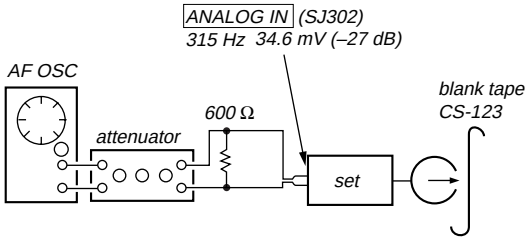

4. Mode : Playback

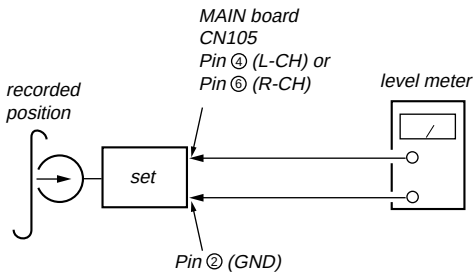

5. Confirm playback the signal recorded in step become adjustment level as follows
   If these levels do not satisfy adjustment level, adjust the RV652 (L-CH) and RV602 (R-CH) on the TC board to repeat steps 3 and 4.

Adjustment level :
playback Level : 30.8 to 38.8mV (–28 to –26dB).

Adjustment Location :

[TC BOARD]

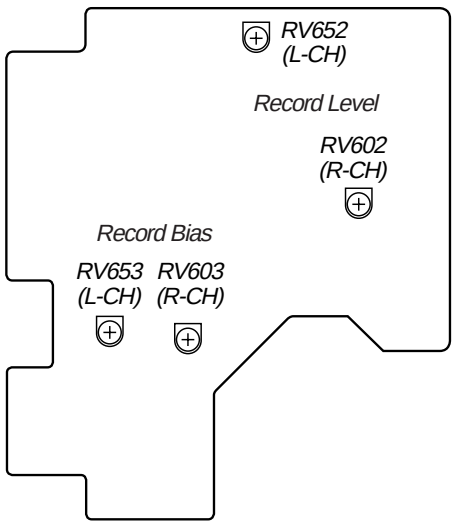

CD SECTION

Note :
1. CD Block is basically designed to operate without adjustment. Therefore, check each item in order given.
2. Use YEDS-18 disc (3-702-101-01) unless otherwise indicated.
3. Use an oscilloscope with more than 10MΩ impedance.
4. Clean the object lens by an applicator with neutral detergent when the signal level is low than specified value with the following checks.

RF Level Check

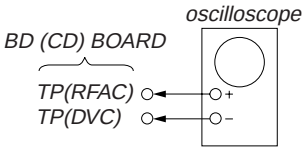

Procedure :
1. Connect an oscilloscope to TP (RFAC) and TP (DVC).
2. Turn the power on.
3. Load a disc (YEDS-18) and playback the number five track.
4. Confirm that oscilloscope waveform is clear and check RF signal level is correct or not.

Note: Clear RF signal waveform means that the shape "◊" can be clearly distinguished at the center of the waveform.

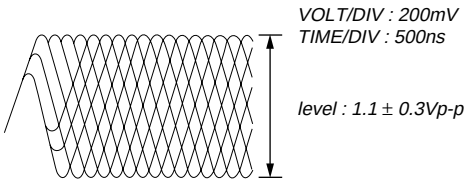

E-F Balance (1 Track jump) Check

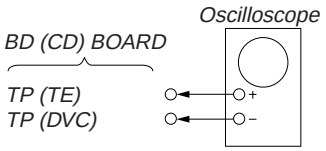

Procedure:
1. Connect an oscilloscope to TP (TE) and TP (DVC).
2. Turn the power on.
3. Load a disc (YEDS-18) and playback the number five track.
4. Press the CD ▶II button. (Becomes the 1track jump mode.)
5. Confirm that the level B and A (DC voltage) on the oscilloscope waveform.

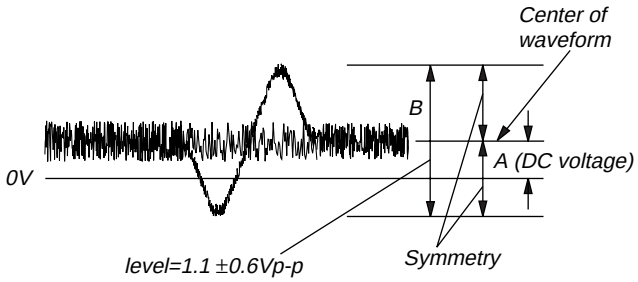

Specification level: $\frac{A}{B}$ x 100=less than ±22%

Ajustment Location :
[BD (CD) BOARD] — SIDE A —

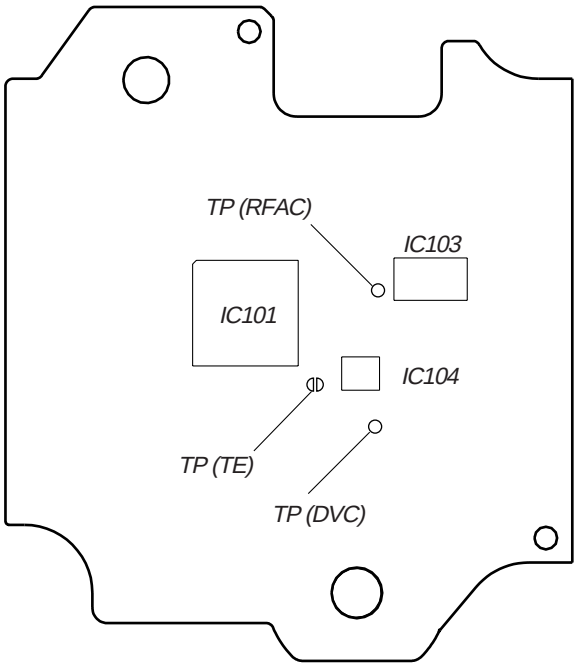

MD SECTION

Note 1: About "R"
As this unit has only a few buttons, some operations require the use of remote commander (RM-SM100W/provided with unit) buttons. These operations are indicated as "R" in this manual.
Example: MENU/NO "R" ...Press the MENU/NO button of the remote commander.

Note 2: Incorrect operations may be performed if the MD test mode is not entered properly.
In this case, press the I/⏻ button to turn the power off, and retry to enter the MD test mode.

1. Parts Replacement and Adjustment

If malfunctions caused by optical pick-up such as sound skipping are suspected, follow the following check.

Check before replacement

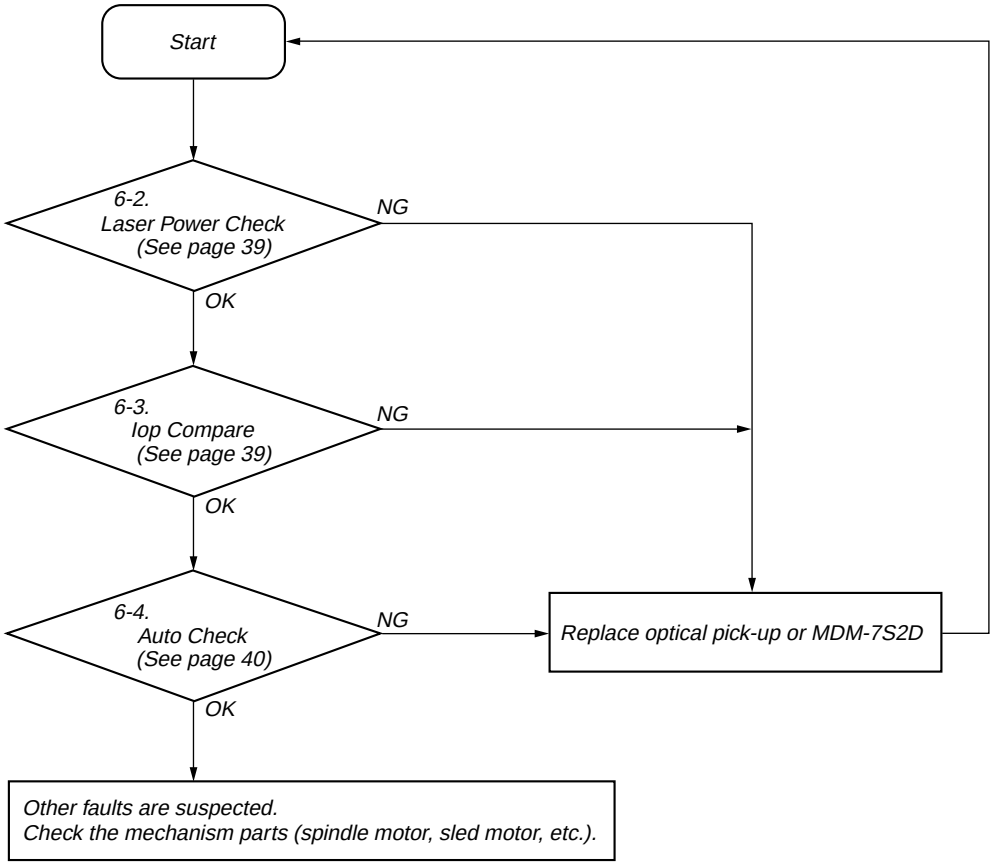

Flow Chart for Adjustment

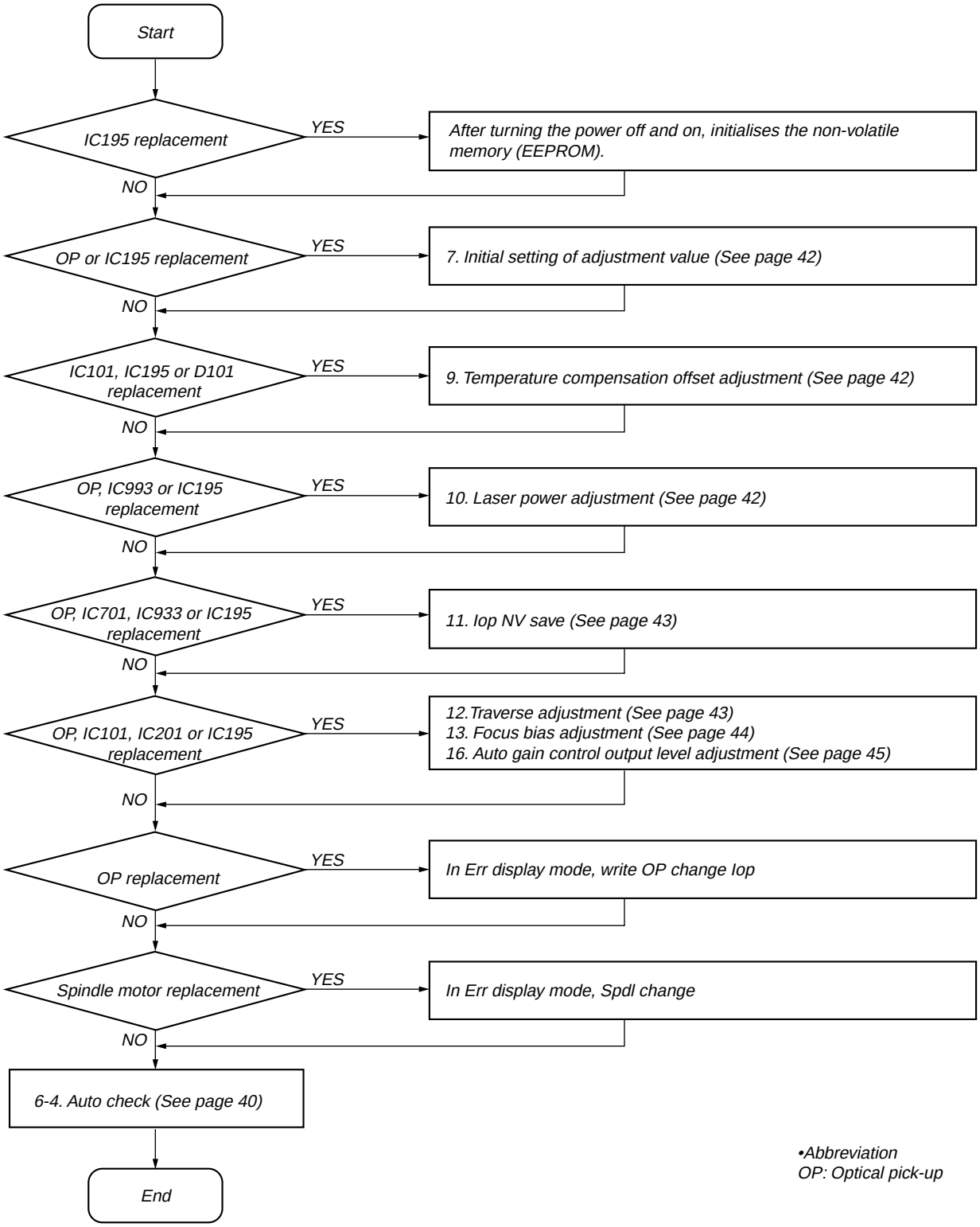

•Abbreviation
OP: Optical pick-up

2. Precautions for Checking Laser Diode Emission

To check the emission of the laser diode during adjustments, never view directly from the top as this may lose your eye-sight.

3. Precautions for Use of Optical Pick-Up (KMS-262A/262E)

As the laser diode in the optical pick-up is easily damaged by static electricity, solder the laser tap of the flexible board when handling it. Before disconnecting the connector, perform soldering bridge to the laser tap. Before connecting the connector, be careful not to remove the solder. Also take adequate measures to prevent damage by static electricity. Handle the flexible board with care as it breaks easily.

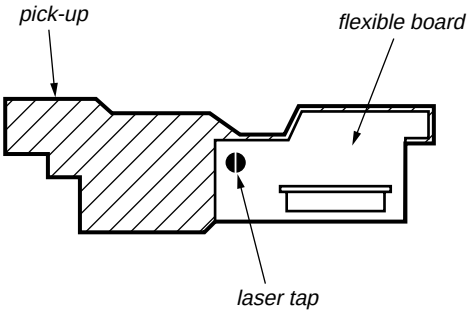

Optical pick-up flexible board

4. Precautions for Adjustments

1. When replacing the following parts, perform the adjustments and checks with ◯ in the order shown in the following table.
2. Set the MD test mode when performing adjustments.
   After completing the adjustments, exit the MD test mode.
   Perform the adjustments and checks in “Group Service” of the MD test mode.
3. Perform the adjustments to be needed in the order shown.
4. Use the following tools and measuring devices.

- Check Disc (TDYS-1) (Part No. : 4-963-646-01)
- Test Disk (MDW-74/GA-1) (Part No. : 4-229-747-01)
- Laser power meter LPM-8001 (Part No. : J-2501-046-A)
  or
  MD Laser power meter 8010S (Part No. : J-2501-145-A)*1
  - Oscilloscope (Measure after performing CAL of prove.)
  - Digital voltmeter
  - Thermometer
  - Jig for checking BD (MD) board waveform
    (Part No. : J-2501-196-A)

5. When observing several signals on the oscilloscope, etc., make sure that VC and ground do not connect inside the oscilloscope.
   (VC and ground will become short-circuited.)
6. Using the above jig enables the waveform to be checked without the need to solder.
   (Refer to Servicing Notes on page 12)
7. As the disc used will affect the adjustment results, make sure that no dusts nor fingerprints are attached to it.

*1 **Laser power meter**
When performing laser power checks and adjustment (electrical adjustment), use of the new MD laser power meter 8010S (Part No. J-2501-145-A) instead of the conventional laser power meter is convenient.
It sharply reduces the time and trouble to set the laser power meter sensor onto the objective lens of optical pick-up.

Adjustment	Parts to be replaced						
	Optical Pick-up	IC101	IC701	IC201	IC993	IC195	D101
7. Initial setting of adjustment value	◯	×	×	×	×	◯	×
8. Recording of Iop information	◯	×	×	×	×	◯	×
9. Temperature compensation offset adjustment	×	◯	×	×	×	◯	◯
10. Laser power adjustment	◯	×	×	×	◯	◯	×
11. Iop NV Save	◯	×	◯	×	◯	◯	×
12. Traverse adjustment	◯	◯	×	◯	×	◯	×
13. Focus bias adjustment	◯	◯	×	◯	×	◯	×
16. Auto gain adjustment	◯	◯	×	◯	×	◯	×
6-4. AUTO CHECK	◯	◯	×	◯	◯	◯	×

5. Using the Continuously Recorded Disc

* This disc is used in focus bias adjustment and error rate check. The following describes how to create a continuous recording disc.

1. Insert a disc (blank disc) commercially available.
2. Press the ⏮ "R" or ⏭ "R" button and display "CREC 2MODE" (C37).
3. Press the ENTER/YES "R" button again to display "CREC 2 MID".
   Display "CREC 2(0300)" and start to recording.
4. Complete recording within 5 minutes.
5. Press the MENU/NO "R" button and stop recording .
6. Press the ⏏ (MD) button and remove the disc.

The above has been how to create a continuous recorded data for the focus bias adjustment and error rate check.

Note: Be careful not to apply vibration during continuous recording.

6. Checks Prior to Repairs

These checks are performed before replacing parts according to "approximate specifications" to determine the faulty locations. For details, refer to "Checks Prior to Parts Replacement and Adjustments in MD" (see page 13).

6-1. Temperature Compensation Offset Check

When performing adjustments, set the internal temperature and room temperature to 22ºC to 28ºC.

Procedure:

1. Press the ⏮ "R" or ⏭ "R" button to display "TEMP CHECK" (C12).
2. Press the ENTER/YES "R" button.
3. "T=@@(##) [OK]" should be displayed. If "T=@@ (##) [NG]" is displayed, it means that the results are bad.
   (@@ indicates the current value set, and ## indicates the value written in the non-volatile memory.)

6-2. Laser Power Check

Before checking, check the Iop value of the optical pick-up.
Refer to 8. Recording and Displaying the Iop Information (see page 42).

Connection:

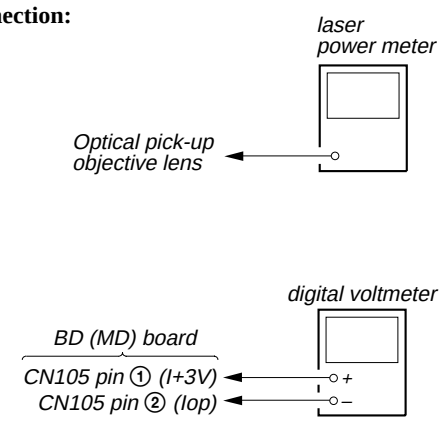

Procedure:

1. Set the laser power meter on the objective lens of the optical pick-up. (When it cannot be set properly, press the ◀◀ button or ▶▶ button to move the optical pick-up.)
   Connect the digital volt meter to CN105 pin ① (I+3V) and CN105 pin ② (Iop).
2. Then, press the ⏮ "R" or ⏭ "R" button and display "LDPWR CHECK" (C13).
3. Press the ENTER/YES "R" button once and display "L 0.93mW$□□". Check that the reading of the laser power meter becomes specified value.

Specified Value:

KMS-262A	0.84 to 0.92mW
KMS-262E	0.90 to 0.96mW

4. Press the ENTER/YES "R" button once more and display " L 8.65mW$□□". Check that the reading the laser power meter and digital volt meter satisfy the specified value.

Note : Never allow the laser emission at 8.65mW for 15 seconds or longer.

Specified Value:

Laser power meter reading :

KMS-262A	8.10 to 8.70mW
KMS-262E	8.40 to 8.90mW

Digital voltmeter reading : Optical pick-up displayed value ± 10%

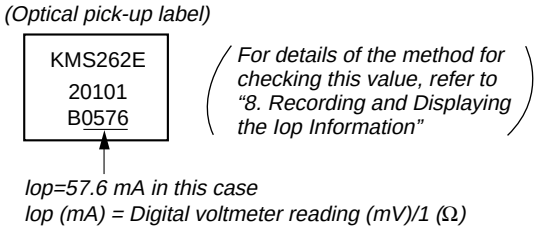

5. Press the MENU/NO "R" button and display "LDPWR CHECK" (C13) and stop the laser emission.
   (The MENU/NO "R" button is effective at all times to stop the laser emission.)

Note: After step 4, each time the ENTER/YES "R" button is pressed, the display will be switched to "L 0.73mW$□□"and "L 7.70mW$□□" "L WPホセイ$□□". Nothing needs to be performed here.

Checking Location: BD (MD) board (see page 46)

6-3. Iop Compare

The current Iop value at laser power 8.65mW (KMS-262E) or 8.4mW (KMS-262A) output and reference Iop value (set at shipment) written in the nonvolatile memory are compared, and the rate of increase/decrease will be displayed in percentage.

Note: Perform this function with the optical pick-up set at room temperature.

Procedure:

1. Press the ⏮ "R" or ⏭ "R" button to display "Iop Compare" (C27).
2. Press the ENTER/YES "R" button and start measurements.
3. When measurements complete, the display changes to "± xx% yy".
   xx is the percentage of increase/decrease, and OK or NG is displayed at yy to indicate whether the percentage of increase/decrease is within the allowable range.
4. Press the MENU/NO "R" button to end.

6-4. Auto Check

This test mode performs CREC and CPLAY automatically for mainly checking the characteristics of the optical pick-up. To perform this test mode, the laser power must first be checked. Perform Auto Check after the laser power check and Iop compare.

Procedure:

1. Display "AUTO CHECK" and press the ENTER/YES "R" button. If "LDPWR ミチェック" is displayed, it means that the laser power check has not been performed. In this case, perform the laser power check and Iop Compare, and then repeat from step1.
2. If a disc is in the mechanical deck, it will be ejected forcibly. "DISC IN" will be displayed in this case. Load a test disc (MDW-74/GA-1) which can be recorded.
3. If a disc is loaded at step 2, the check will start automatically.
4. When "XX CHECK" is displayed, the item corresponding to XX will be performed.
   When "06 CHECK" completes, the disc loaded at step 2 will be ejected. "DISC IN" will be displayed. Load the check disc (TDYS-1).
5. When the disc is loaded in the step 4, the check will automatically be resumed from "07 CHECK".
6. After completing to "0C CHECK", check OK or NG will be displayed. If all items are OK, "CHK ALL OK" will be displayed. If any item is NG, it will be displayed as "NG:xxxx".

When "CHK ALL OK" is displayed, it means that the optical pick-up is normal. Check the operations of other parts (spindle motor, sled motor, etc.).

When displayed as "NG:xxxx", it means that the optical pick-up is faulty. In this case, replace the optical pick-up.

6-5. Other Checks

All the following checks are performed by the Auto Check mode. They therefore need not be performed in normal operation.

6-6. Traverse Check
6-7. Focus Bias Check
6-8. C PLAY Check
6-9. Self-Recording/Playback Check

6-6. Traverse Check

Note 1: Data will be erased during MO reading if a recorded disc is used in this adjustment.

Note 2: If the traverse waveform is not clear, connect the oscilloscope as shown in the following figure so that it can be seen more clearly.

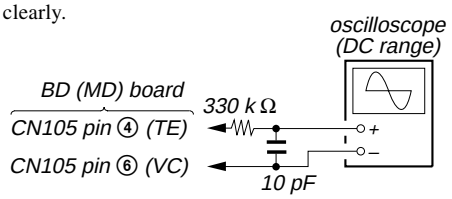

Connection:

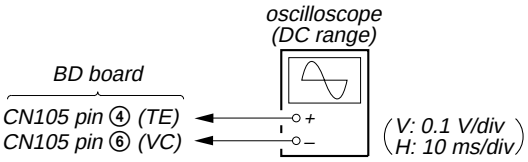

Procedure:

1. Connect an oscilloscope to CN105 pin ④ (TE) and CN105 pin ⑥ (VC) on the BD board.
2. Load a disc (any available on the market). (Refer to Note 1)
3. Press the ▶▶ "R" button to move the optical pick-up outside the pit.
4. Press the ⏮ "R" or ⏭ "R" button to display "EF MO CHECK"(C14).
5. Press the ENTER/YES "R" button to display "EFB = ⬚⬚ MO-R".
   (Laser power READ power/Focus servo ON/tracking servo OFF/ spindle (S) servo ON)
6. Observe the waveform of the oscilloscope, and check that the specified value is satisfied. Do not press the ⏮ "R" or ⏭ "R" button.
   (Read power traverse checking)

Traverse Waveform

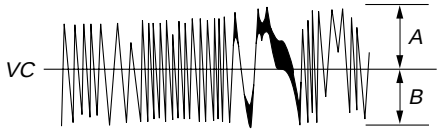

Specified value : Below 10% offset value

$$\text{Offset value (\%)} = \frac{|A - B|}{2(A + B)} \times 100$$

7. Press the ENTER/YES "R" button to display "EFB = ⬚⬚ MO-W".
8. Observe the waveform of the oscilloscope, and check that the specified value is satisfied. Do not press the ⏮ "R" or ⏭ "R" button.
   (Write power traverse checking)

Traverse Waveform

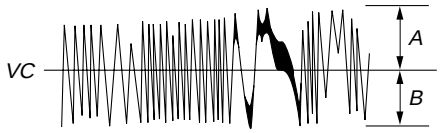

Specified value : Below 10% offset value

$$\text{Offset value (\%)} = \frac{|A - B|}{2(A + B)} \times 100$$

9. Press the ENTER/YES "R" button to display "EFB = ⬚⬚ MO-P".
   Then, the optical pick-up moves to the pit area automatically and servo is imposed.
10. Observe the waveform of the oscilloscope, and check that the specified value is satisfied. Do not press the ⏮ "R" or ⏭ "R" button.

Traverse Waveform

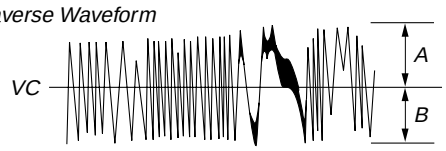

Specified value : Below 10% offset value

$$\text{Offset value (\%)} = \frac{|A - B|}{2\,(A + B)} \times 100$$

11. Press the MENU/NO "R" button to display "EF MO CHECK" (C14).
    The disc stops rotating automatically.
12. Press the ⏏ (MD) button and take out the disc.
13. Load the check disc (TDYS-1).
14. Press the ⏮ "R" or ⏭ "R" button and display "EF CD CHECK" (C15).
15. Press the ENTER/YES "R" button to display "EFB = ⬚⬚CD".
    Servo is imposed automatically.
16. Observe the waveform of the oscilloscope, and check that the specified value is satisfied. Do not press the ⏮ "R" or ⏭ "R" button.

Traverse Waveform

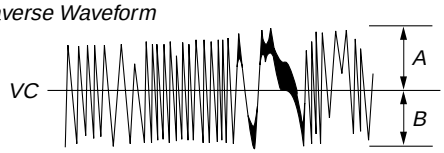

Specified value : Below 10% offset value

$$\text{Offset value (\%)} = \frac{|A - B|}{2\,(A + B)} \times 100$$

17. Press the MENU/NO "R" button to display "EF CD CHECK" (C15).
18. Press the ⏏ (MD) button and take out the check disc (TDYS-1).

Checking Location: BD board (see page 46)

6-7. Focus Bias Check

Change the focus bias and check the focus tolerance amount.

Procedure:

1. Load the test disc (MDW-74/GA-1).
2. Press the ⏮ "R" or ⏭ "R" button to display "CPLAY 2MODE" (C36).
3. Press the ENTER/YES "R" button to display "CPLAY 2MID".
4. Press the MENU/NO "R" button when "C = ⬚⬚⬚⬚ AD = ⬚⬚)" is displayed.
5. Press the ⏮ "R" or ⏭ "R" button to display "FBIAS CHECK" (C16).
6. Press the ENTER/YES "R" button to display "⬚⬚⬚⬚/⬚⬚ c = ⬚⬚".
   The first four digits indicate the C error rate, the two digits after [/] indicate ADER, and the 2 digits after [c =] indicate the focus bias value.
7. Press the ENTER/YES "R" button to display "⬚⬚⬚⬚/⬚⬚ b = ⬚⬚".
   Check that the C error is about 220 and ADER is below 2.
8. Press the ENTER/YES "R" button to display "⬚⬚⬚⬚/⬚⬚ a = ⬚⬚".
   Check that the C error is about 220 and ADER is below 2.
9. Press the MENU/NO "R" button, then press the ⏏ (MD) button and take out the test disc.

6-8. C Play Check

MO Error Rate Check

Procedure:

1. Load the test disc (MDW-74/GA-1).
2. Press the ⏮ "R" or ⏭ "R" button to display "CPLAY 2MODE" (C36).
3. Press the ENTER/YES "R" button to display "CPLAY 2MID".
4. The display changes to "C = ⬚⬚⬚⬚ AD = ⬚⬚)".
5. If the C error rate is below 20, check that ADER is 00.
6. Press the MENU/NO "R" button to stop playback, then press the ⏏ (MD) button and take out the test disc.

CD Error Rate Check

Procedure:

1. Load the check disc (TDYS-1).
2. Press the ⏮ "R" or ⏭ "R" button to display "CPLAY 2MODE" (C36).
3. Press the ENTER/YES "R" button to display "CPLAY 2MID".
4. The display changes to "C = ⬚⬚⬚⬚ AD = ⬚⬚)".
5. Check that the C error rate is below 20.
6. Press the MENU/NO "R" button to stop playback, then press the ⏏ (MD) button and take out the check disc.

6-9. Self-Recording/playback Check

Prepare a continuous recording disc using the unit to be repaired and check the error rate.

Procedure:

1. Load a recordable disc (blank disc).
2. Press the ⏮ "R" or ⏭ "R" button to display "CREC 2MODE" (C37).
3. Press the ENTER/YES "R" button to display "CREC 2MID".
4. When recording starts, lights up " MD " and display "CREC 2 (@@@@)" (@@@@ is the address).
5. About 1 minute later, press the MENU/NO "R" button to stop continuous recording.
6. Press the ⏮ "R" or ⏭ "R" button to display "CPLAY 2 MODE" (C36).
7. Press the ENTER/YES "R" button to display "CPLAY 2MID".
8. "C = ⬚⬚⬚⬚ AD = ⬚⬚)" will be displayed.
9. Check that the C error becomes below 20 and the AD error below 2.
10. Press the MENU/NO "R" button to stop playback, then press the ⏏ (MD) button and take out the disc.

7. Initial Setting of Adjustment Value

Note:

Mode which sets the adjustment results recorded in the non-volatile memory to the initial setting value. However the results of the temperature compensation offset adjustment will not change to the initial setting value.

If initial setting is performed, perform all adjustments again excluding the temperature compensation offset adjustment.

For details of the initial setting, refer to "4. Precautions for Adjustments" (See page 38) and execute the initial setting before the adjustment as required.

Procedure:

1. Press the ⏮ "R" or ⏭ "R" button to display "ADJ CLEAR" (C28).
2. Press the ENTER/YES "R" button. "Complete!" will be displayed momentarily and initial setting will be executed, after which "ADJ CLEAR" (C28) will be displayed.

8. Recording and Displaying the Iop Information

The Iop data can be recorded in the non-volatile memory. The Iop value on the optical pick-up label and the Iop value after the adjustment will be recorded. Recording these data eliminates the need to read the label on the optical pick-up.

Recording Procedure:

1. Press the ⏮ "R" or ⏭ "R" button to display "Iop Write" (C05), and press the ENTER/YES "R" button.
2. The display becomes "Ref=@@@.@" (@ is an arbitrary number) and the numbers which can be changed will blink.
3. Input the Iop value on the optical pick-up label.
   To select the number: Press the ⏮ "R" or ⏭ "R" button.
   To select the digit : Press the TIMER SET "R" button.
4. When the ENTER/YES "R" button is pressed, the display becomes "Measu=@@@.@" (@ is an arbitrary number).
5. As the adjustment results are recorded for the step 4 value. Leave it as it is and press the ENTER/YES "R" button.
6. "Complete!!" will be displayed momentarily. The value will be recorded in the non-volatile memory and the display will become "Iop Write" (C05).

Display Procedure:

1. Press the ⏮ "R" or ⏭ "R" button to display "Iop Read"(C26).
2. Press the ENTER/YES "R" button.
3. "@@.@/##.#" is displayed and the recorded contents are displayed.
   @@.@ indicates the Iop value on the optical pick-up label.
   ##.# indicates the Iop value after adjustment.
4. To end, press the MENU/NO "R" button to display "Iop Read" (C26).

9. Temperature Compensation Offset Adjustment

Save the temperature data at that time in the non-volatile memory as 25 ˚C reference data.

Note:

1. Usually, do not perform this adjustment.
2. Perform this adjustment in an ambient temperature of 22 ˚C to 28 ˚C. Perform it immediately after the power is turned on when the internal temperature of the unit is the same as the ambient temperature of 22 ˚C to 28 ˚C.
3. When D101 has been replaced, perform this adjustment after the temperature of this part has become the ambient temperature.

Procedure:

1. Press the ⏮ "R" or ⏭ "R" button to display "TEMP ADJUST" (C03).
2. Press the ENTER/YES "R" button to select the "TEMP ADJUST" mode.
3. "TEMP = ⬚⬚ [OK]" and the current temperature data will be displayed.
4. To save the data, press the ENTER/YES "R" button.
   When not saving the data, press the MENU/NO "R" button.
5. When the ENTER/YES "R" button is pressed, "TEMP = ⬚⬚ SAVE" will be displayed and turned back to "TEMP ADJUST" (C03) display then.
   When the MENU/NO "R" button is pushed, it returns to the display of "TEMP ADJUST" (C03) immediately.

Specified Value:

The "TEMP = ⬚⬚" should be within "E0 - EF", "F0 - FF", "00 - 0F", "10 - 1F" and "20 - 2F".

10. Laser Power Adjustment

Before starting adjustment:

The adjustment value differs depending on the types (KMS-262A or KMS-262E) of optical pickup. Be sure to confirm the type name before starting adjustment.

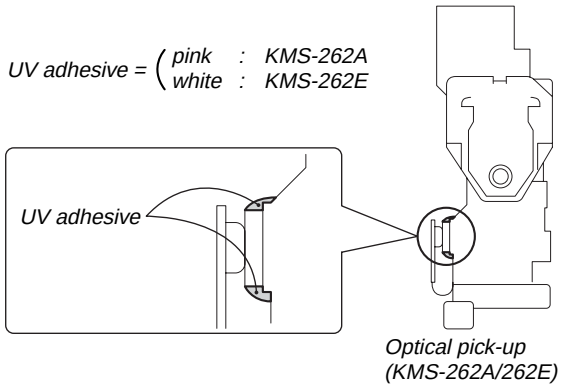

Check the Iop value of the optical pick-up before adjustments. (Refer to 8. Recording and Displaying the Iop Information)

Connection:

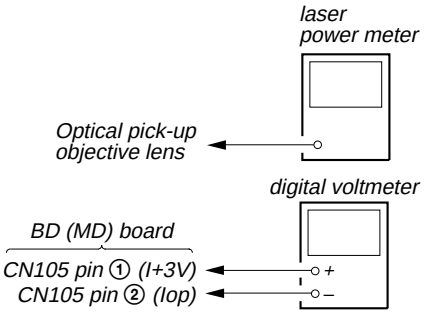

Procedure:

1. Insert the laser power meter probe into the disk insertion slot and set it on top of the objective lens of the optical pick-up. (When it cannot be set properly, press the ◀◀ "R" button or ▶▶ "R" button to move the optical pick-up)
   Connect the digital voltmeter to CN105 pin ① (I+3V) and CN105pin ② (Iop) on the BD (MD) board.
2. Press the ⏮ "R" or ⏭ "R" button to display "LDPWR ADJUST" (C04).
   (Laser power : For adjustment)
3. Press the ENTER/YES "R" button once to display "L 0.93 mW $ ⬚⬚".
4. Press the ⏮ "R" or ⏭ "R" button until the laser power meter reading matches with the specified value.
   Press the ENTER/YES "R" button after setting the range knob of the laser power meter to 10mW, and save the adjustment results. ("L SAVE $ ⬚⬚" will be displayed for a moment)

Specified Value:

KMS-262A	0.85 to 0.91mW
KMS-262E	0.90 to 0.95mW

5. Then "L 8.65 mW $ ⬚⬚" will be displayed.

6. Press the ⏮ "R" or ⏭ "R" button so that the reading of the laser power meter becomes the specified value, press the ENTER/YES "R" button to save it.

Note: Do not perform the emission with 8.65mW more than 15 seconds continuously.

Specified Value:

KMS-262A	8.2 to 8.6mW
KMS-262E	8.5 to 8.8mW

7. Then,press the ⏮ "R" or ⏭ "R" button to display "LDPWR CHECK" (C13).
8. Press the ENTER/YES "R" button once to display "L 0.93mW$ □□". Check that the reading of the laser power meter matches with the specified value.

Specified Value:

KMS-262A	0.84 to 0.92mW
KMS-262E	0.90 to 0.96mW

9. Press the ENTER/YES "R" button once more to display "L 8.65mW$ □□". Check that the reading the laser power meter and digital voltmeter satisfy the specified value.
   Note down the digital voltmeter reading value.

Specified Value:

Laser power meter reading :
8.10 to 8.70mW (KMS-262A)
8.40 to 8.90mW (KMS-262E)

Digital voltmeter reading : Value on the optical pick-up label ±10%

(Optical pick-up label)

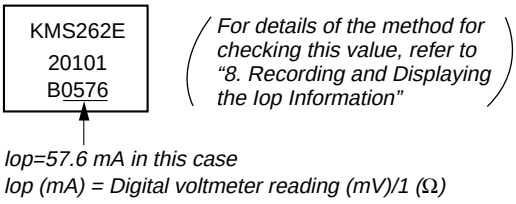

10. Press the MENU/NO "R" button to display "LDPWR CHECK" (C13) and stop the laser emission.
    (The MENU/NO "R" button is effective at all times to stop the laser emission)
11. Press the ⏮ "R" or ⏭ "R" button to display "Iop Write" (C05).
12. Press the ENTER/YES "R" button. When the display becomes Ref=@@@.@ (@ is an arbitrary number), press the ENTER/YES "R" button to display "Measu=@@@.@" (@ is an arbitrary number).
13. The numbers which can be changed will blink. Input the Iop value noted down at step 9.
    To select the number : Press the ⏮ "R" or ⏭ "R" button.
    To select the digit : Press the TIMER SET "R" button.
14. When the ENTER/YES "R" button is pressed, "Complete!" will be displayed momentarily. The value will be recorded in the non-volatile memory and the display will become "Iop Write" (C05).

Note: After step 9, each time the ENTER/YES "R" button is pressed, the display will be switched to "L 0.73mW$ □□", "L 7.70mW$ □□" "L WPホセイ$□□" Nothing needs to be performed here.

11. Iop NV Save

Write the reference values in the nonvolatile memory to perform "Iop compare". As this involves rewriting the reference values, do not perform this procedure except when adjusting the laser power during replacement of the optical pick-up and when replacing the IC102. Otherwise the optical pick-up check may deteriorate.

Note: Perform this function with the optical pick-up set at room temperature.

Procedure:

1. Press the ⏮ "R" or ⏭ "R" button to display "Iop NV Save" (C06).
2. Press the ENTER/YES "R" button and display "Iop [stop]".
3. After the display changes to "Iop =□□save?", press the ENTER/YES "R" button.
4. After "Complete!" is displayed momentarily, the display changes to "Iop 8.4 mW".
5. After the display changes to "Iop=□□save?", press the ENTER/YES "R" button.
6. When "Complete!" is displayed, it means that Iop NV saving has been completed.

12. Traverse Adjustment

Note 1: Data will be erased during MO reading if a recorded disc is used in this adjustment.

Note 2: If the traverse waveform is not clear, connect the oscilloscope as shown in the following figure so that it can be seen more clearly.

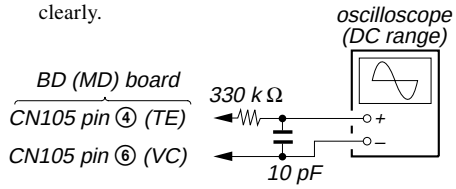

Connection:

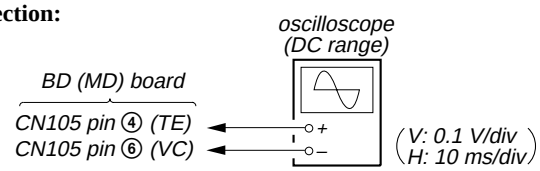

Procedure:

1. Connect an oscilloscope to CN105 pin ④ (TE) and CN105 pin ⑥ (VC) on the BD (MD) board.
2. Load a disc (any available on the market). (Refer to Note 1)
3. Press the ▶▶ "R" button to move the optical pick-up outside the pit.
4. Press the ⏮ "R" or ⏭ "R" button to display "EF MO ADJUST" (C07).
5. Press the ENTER/YES "R" button to display "EFB = □□ MO-R".
   (Laser power READ power/Focus servo ON/tracking servo OFF/spindle (S) servo ON)
6. Press the ⏮ "R" or ⏭ "R" button so that the waveform of the oscilloscope becomes the specified value.
   (When the ⏮ "R" or ⏭ "R" button is pressed, the □□ of "EFB= □□" changes and the waveform changes) In this adjustment, waveform varies at intervals of approx. 2%. Adjust the waveform so that the specified value is satisfied as much as possible.
   (Read power traverse adjustment)

Traverse Waveform

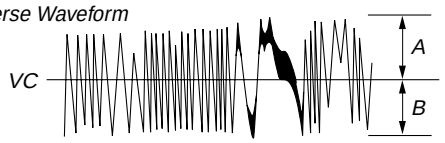

Specification A = B

7. Press the ENTER/YES "R" button and save the result of adjustment to the non-volatile memory ("EFB = □□ SAVE" will be displayed for a moment. Then "EFB = □□ MO-W" will be displayed).

8. Press the ⏮ "R" or ⏭ "R" button so that the waveform of the oscilloscope becomes the specified value.
   (When the ⏮ "R" or ⏭ "R" button is pressed, the ▯▯ of "EFB= ▯▯" changes and the waveform changes) In this adjustment, waveform varies at intervals of approx. 2%. Adjust the waveform so that the specified value is satisfied as much as possible.
   (Write power traverse adjustment)

Traverse Waveform

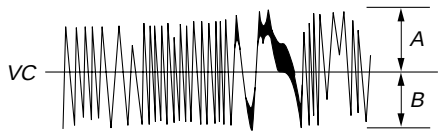

Specification A = B

9. Press the ENTER/YES "R" button, and save the adjustment results in the non-volatile memory. ("EFB = ▯▯ SAVE" will be displayed for a moment)
10. "EFB = ▯▯ MO-P" will be displayed.
    The optical pick-up moves to the pit area automatically and servo is imposed.
11. Press the ⏮ "R" or ⏭ "R" button until the waveform of the oscilloscope moves closer to the specified value.
    In this adjustment, waveform varies at intervals of approx. 2%. Adjust the waveform so that the specified value is satisfied as much as possible.

Traverse Waveform

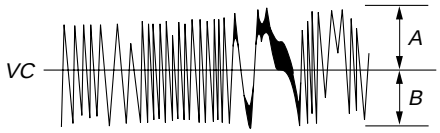

Specification A = B

12. Press the ENTER/YES "R" button, and save the adjustment results in the non-volatile memory. ("EFB = ▯▯ SAVE" will be displayed for a moment)
    Next "EF MO ADJUST" (C07) is displayed. The disc stops rotating automatically.
13. Press the ⏏ (MD) button and take out the disc.
14. Load the check disc (TDYS-1).
15. Press the ⏮ "R" or ⏭ "R" button to display "EF CD ADJUST" (C08).
16. Press the ENTER/YES "R" button to display "EFB = ▯▯ CD". Servo is imposed automatically.
17. Press the ⏮ "R" or ⏭ "R" button so that the waveform of the oscilloscope moves closer to the specified value.
    In this adjustment, waveform varies at intervals of approx. 2%. Adjust the waveform so that the specified value is satisfied as much as possible.

Traverse Waveform

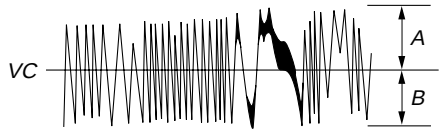

Specification A = B

18. Press the ENTER/YES "R" button, display "EFB = ▯▯ SAVE" for a moment and save the adjustment results in the non-volatile memory.
    Next "EF CD ADJUST" (C08) will be displayed.
19. Press the ⏏ (MD) button and take out the check disc.

Adjustment Location: BD (MD) board (see page 46)

13. Focus Bias Adjustment

Procedure:

1. Load the test disc (MDW-74/GA-1).
2. Press the ⏮ "R" or ⏭ "R" button to display "CPLAY2 MODE" (C36).
3. Press the ENTER/YES "R" button to display "CPLAY 2MID".
4. Press the MENU/NO "R" button when "C = ▯▯▯▯ AD = ▯▯)" is displayed.
5. Press the ⏮ "R" or ⏭ "R" button to display "FBIAS ADJUST" (C09).
6. Press the ENTER/YES "R" button to display "▯▯▯▯/▯▯ a = ▯▯ T".
   The first four digits indicate the C error rate, the two digits after "/ " indicate ADER, and the 2 digits after "a =" indicate the focus bias value.
7. Press the ⏭ "R" button and find the focus bias value at which the C error rate becomes about 200 (refer to Note 2).
8. Press the ENTER/YES "R" button to display "▯▯▯▯/▯▯ b = ▯▯ T".
9. Press the ⏮ "R" button and find the focus bias value at which the C error rate becomes about 200.
10. Press the ENTER/YES "R" button to display "▯▯▯▯/▯▯ c = ▯▯ T".
11. Check that the C error rate is below 20 and ADER is 00. Then press the ENTER/YES "R" button.
12. If the "(▯▯)" in "▯▯ - ▯▯ - ▯▯ (▯▯)" is above 20, press the ENTER/YES "R" button.
    If below 20, press the MENU/NO "R" button and repeat the adjustment from step 2.
13. Press thet ⏏ (MD) button and take out the disc.

Note 1: The relation between the C error and focus bias is as shown in the following figure. Find points A and B in the following figure using the above adjustment. The focal point position C is automatically calculated from points A and B.

Note 2: As the C error rate changes, perform the adjustment using the average value.

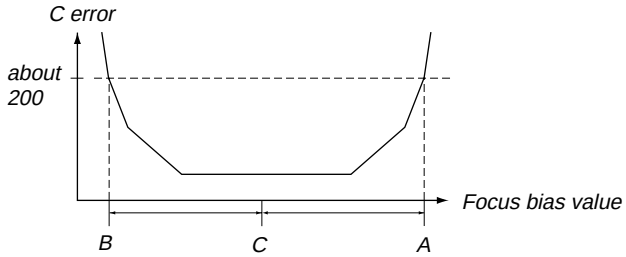

14. Error Rate Check

14-1. CD Error Rate Check

Procedure:

1. Load the check disc (TDYS-1).
2. Press the ⏮ "R" or ⏭ "R" button and display "CPLAY2 MODE" (C36).
3. Press the ENTER/YES "R" button and display "CPLAY2 MID".
4. The display changes to "C = □□□□ AD = □□)".
5. Check that the C error rate is below 20.
6. Press the MENU/NO "R" button to stop playback, then press the ⏏ (MD) button and take out the check disc.

14-2. MO Error Rate Check

Procedure:

1. Load the continuously-recorded disc. (Refer to "5. USING THE CONTINUOUSLY RECORDED DISC" (See page 39))
2. Press the ⏮ "R" or ⏭ "R" button to display "CPLAY2 MODE" (C36).
3. Press the ENTER/YES "R" button to display "CPLAY2MID".
4. The display changes to "C = □□□□ AD = □□)".
5. If the C error rate is below 20, check that ADER is 00.
6. Press the MENU/NO "R" button to stop playback, then press the ⏏ (MD) button and take out the disc.

15. Focus Bias Check

Change the focus bias and check the focus tolerance amount.

Procedure:

1. Load the continuously-recorded disc. (Refer to "5. USING THE CONTINUOUSLY RECORDED DISC" (See page 39))
2. Press the ⏮ "R" or ⏭ "R" button to display "CPLAY2 MODE" (C36).
3. Press the ENTER/YES "R" button to display "CPLAY2 MID".
4. Press the MENU/NO "R" button when "C = □□□□ AD = □□)" is displayed.
5. Press the ⏮ "R" or ⏭ "R" button to display "FBIAS CHECK" (C16).
6. Press the ENTER/YES "R" button to display "□□□□/□□ c = □□".
   The first four digits indicate the C error rate, the two digits after "/ " indicate ADER, and the 2 digits after "c =" indicate the focus bias value.
7. Press the ENTER/YES "R" button and display "□□□□/□□ b = □□".
   Check that the C error is below 220 and ADER is below 2.
8. Press the ENTER/YES "R" button and display "□□□□/□□ a = □□".
   Check that the C error is below 220 and ADER is below 2
9. Press the MENU/NO "R" button, then press the ⏏ (MD) button and take out the disc.

Note: If the C error and ADER are above other than the specified value at points a (step 8. in the above) or b (step 7. in the above), the focus bias adjustment may not have been carried out properly. Adjust perform the beginning again.

16. Auto Gain Control Output Level Adjustment

Be sure to perform this adjustment when the optical pick-up is replaced.

If the adjustment results becomes "Adjust NG!", the optical pick-up may be faulty or the servo system circuits may be abnormal.

16-1. CD Auto Gain Control Output Level Adjustment

Procedure:

1. Load the check disc (TDYS-1).
2. Press the ◀◀ "R" or ▶▶ "R" button to display "AG Set (CD)" (C11).
3. When the ENTER/YES "R" button is pressed, the adjustment will be performed automatically.
   "Complete!" will then be displayed momentarily when the value is recorded in the non-volatile memory, after which the display changes to "AG Set (CD)" (C11).
4. Press the ⏏ (MD) button and take out the check disc.

16-2. MO Auto Gain Control Output Level Adjustment

Procedure:

1. Load the test disc (MDW-74/GA-1).
2. Press the ⏮ "R" or ⏭ "R" button to display "AG Set (MO)" (C10).
3. When the ENTER/YES "R" button is pressed, the adjustment will be performed automatically.
   "Complete!" will then be displayed momentarily when the value is recorded in the non-volatile memory, after which the display changes to "AG Set (MO)" (C10).
4. Press the ⏏ (MD) button and take out the test disc.

Adjustment and checking Loacation:

— BD (MD) BOARD (Side A) —

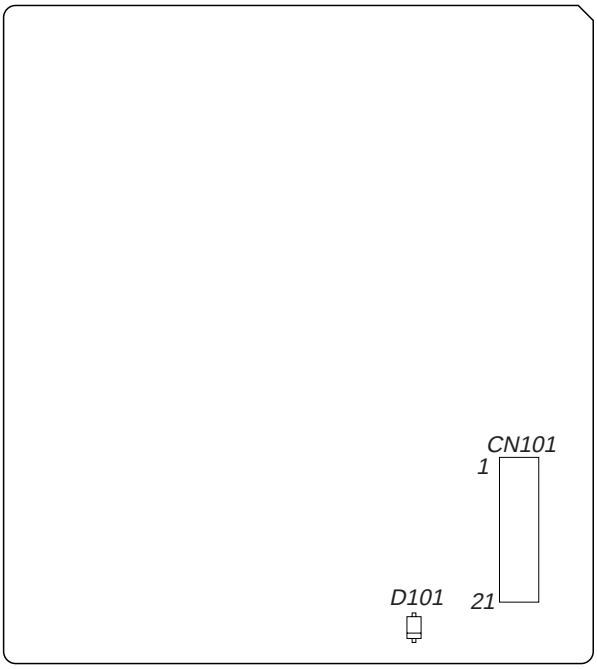

— BD (MD) BOARD (Side A) —

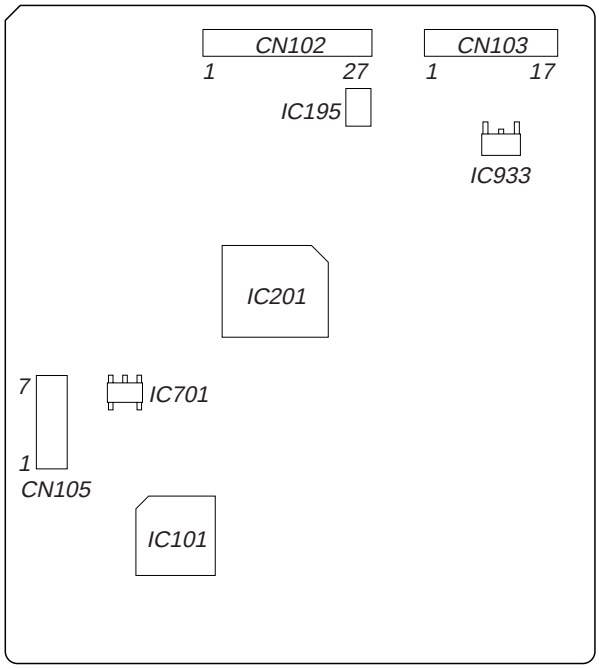

Note: If is useful to use the jig for checking the waveform. (Refer to Servicing Notes on page 12).

SECTION 6
DIAGRAMS

6-1. Circuit Boards Location

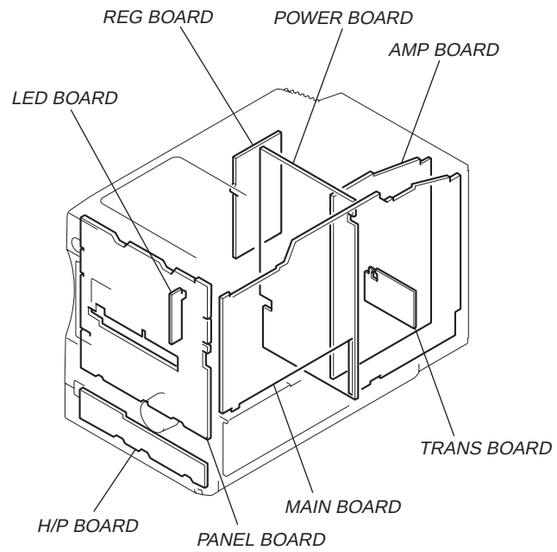

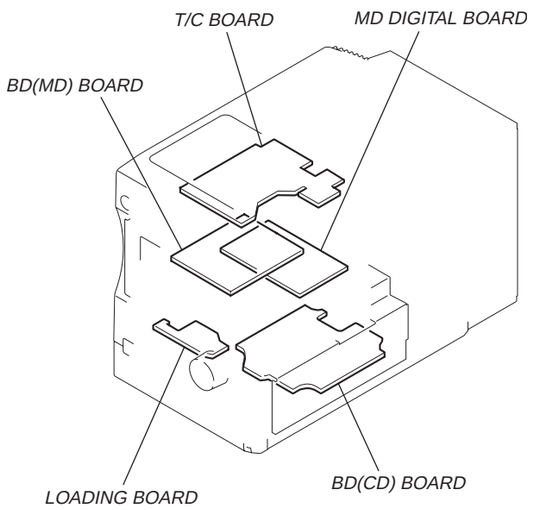

THIS NOTE IS COMMON FOR PRINTED WIRING BOARDS AND SCHEMATIC DIAGRAMS.
(In addition to this, the necessary note is printed in each block.)

For schematic diagrams.

Note:
- All capacitors are in µF unless otherwise noted. pF: µµF 50 WV or less are not indicated except for electrolytics and tantalums.
- All resistors are in Ω and 1/4 W or less unless otherwise specified.
- △ : internal component.
- : fusible resistor.
- : panel designation.

The components identified by mark ⚠ or dotted line with mark ⚠ are critical for safety. Replace only with part number specified.	Les composants identifiés par une marque ⚠ sont critiques pour la sécurité. Ne les remplacer que par une pièce portant le numéro spécifié.

- : B+ Line.
- : B– Line.
- : adjustment for repair.
- Voltages and waveforms are dc with respect to ground under no-signal (detuned) conditions.
- Voltages are taken with a VOM (Input impedance 10 MΩ). Voltage variations may be noted due to normal production tolerances.
  BD (CD) board
  no mark : CD stop
  BD (MD) board
  no mark : MD stop
  ( ) : MD playback
  TC board
  no mark : FM
  ( ) : TAPE record
  Other boards
  no mark : FM
  < > : CD stop
- Waveforms are taken with a oscilloscope. Voltage variations may be noted due to normal production tolerances.
- Circled numbers refer to waveforms.
- Abbreviation
  AUS : Australian model
  CH : Chinese model
  CND : Canadian model
  HK
  : Hong Kong model
- Signal path.
  : FM
  : CD
  : CD DIGITAL IN
  : PB (TAPE)
  : REC (TAPE)
  : PB (MD)
  : REC (MD)
  : USB

For printed wiring boards.

Note:
- : parts extracted from the component side.
- : parts extracted from the conductor side.
- ○ : Through hole.
- : Pattern from the side which enables seeing.

Caution:	
Pattern face side: (SIDE B)	Parts on the pattern face side seen from the pattern face are indicated.
Parts face side: (SIDE A)	Parts on the parts face side seen from the parts face are indicated.

- **Indication of transistor**

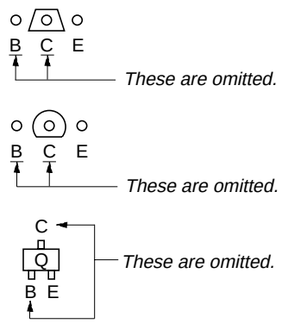

- **Waveforms**

BD (CD) Board

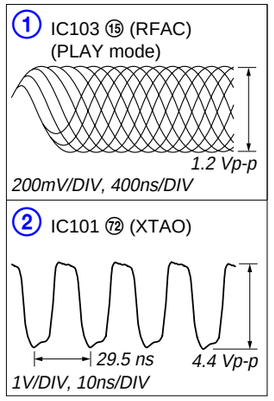

BD (MD) Board

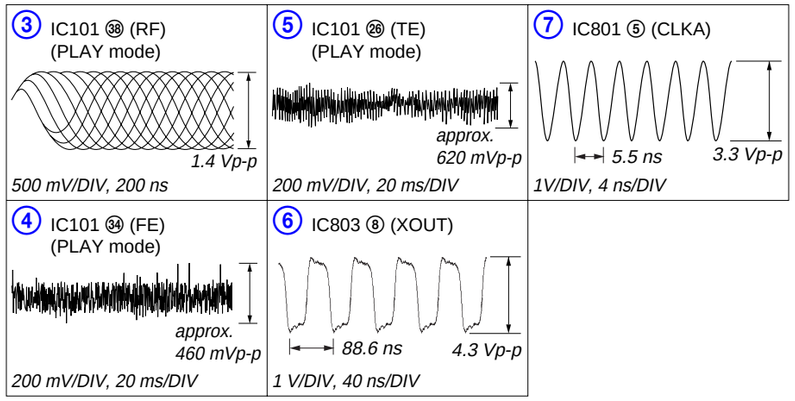

MAIN Board

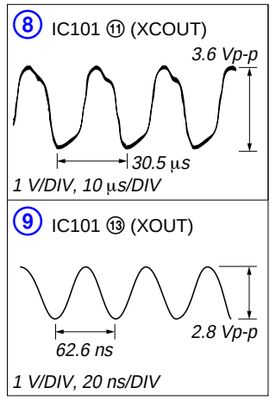

MD DIGITAL Board

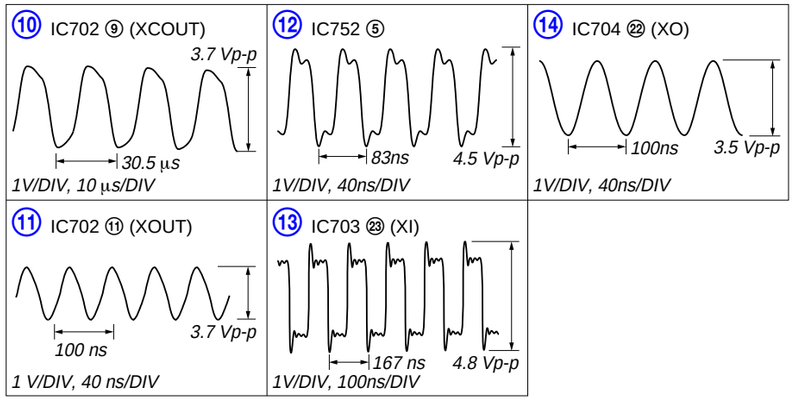

TC Board

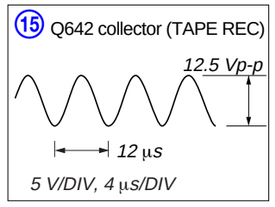

6-2. Block Diagrams

– CD Section –

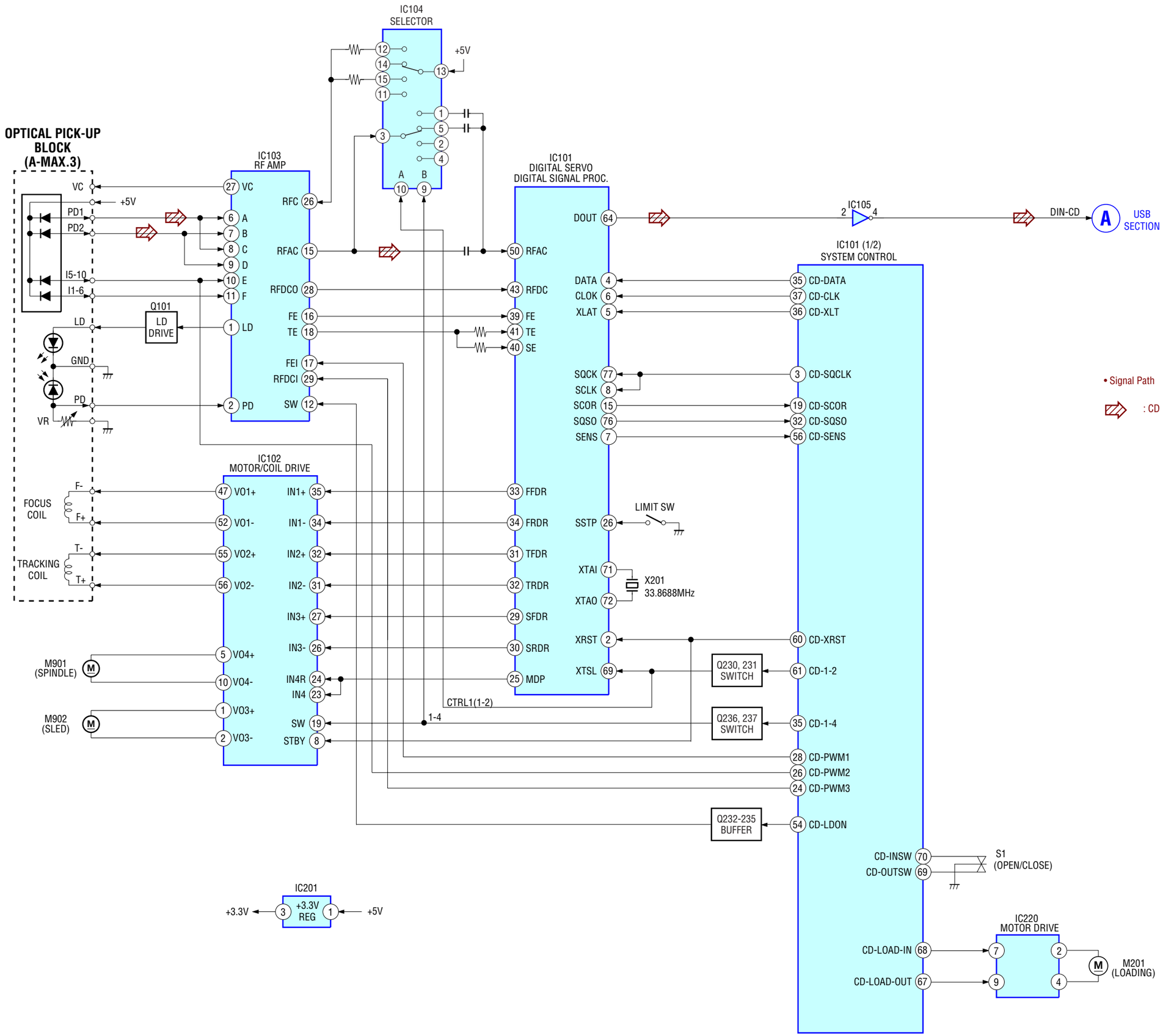

– MD Section –

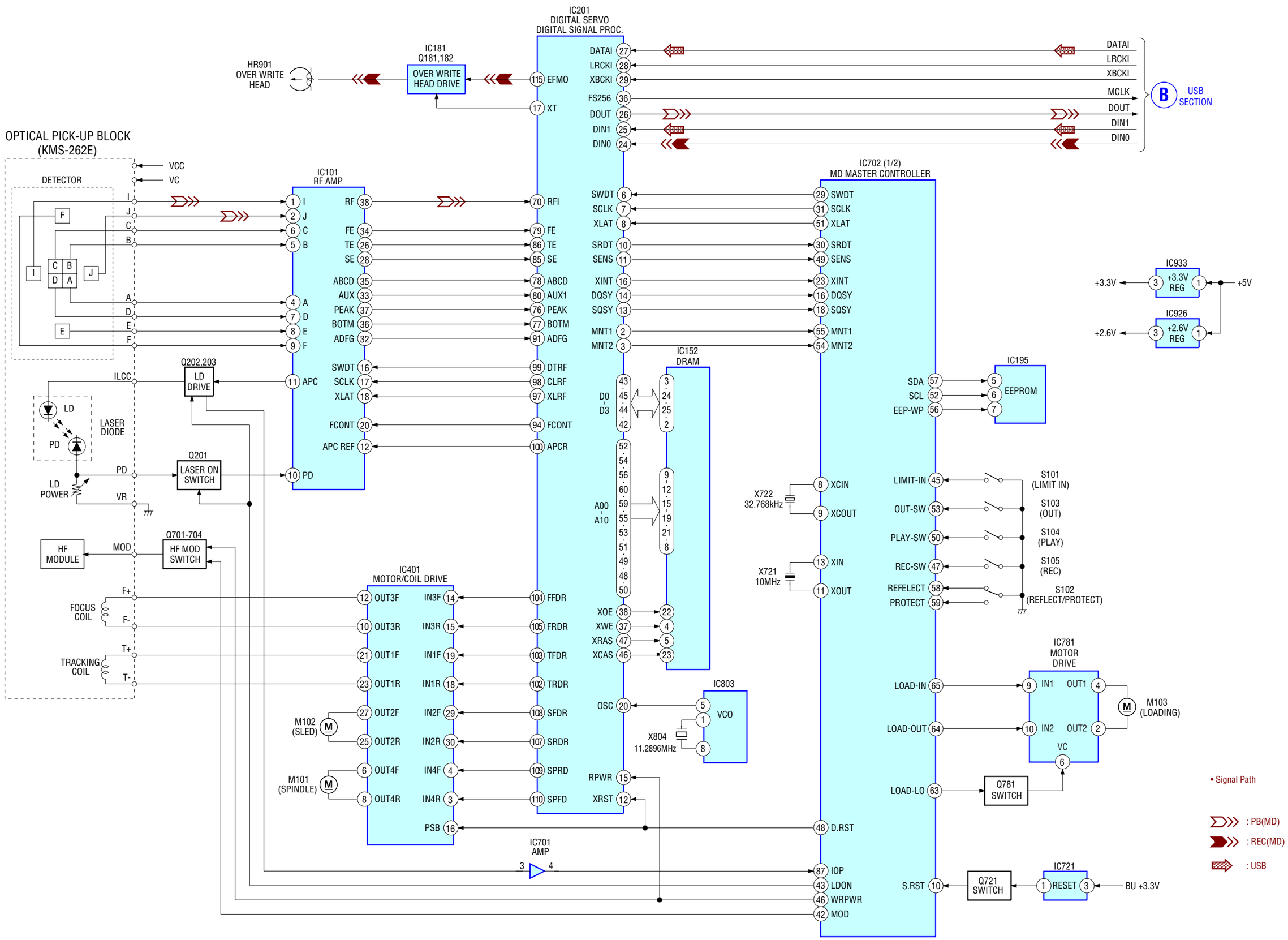
IC201
DIGITAL SERVO
DIGITAL SIGNAL PROC.
HR901
OVER WRITE
HEAD
IC181
Q181,182
OVER WRITE
HEAD DRIVE
EFMO
XT
DATAI
LRCKI
XBCKI
MCLK
DOUT
DIN1
DIN0
B
USB
SECTION
OPTICAL PICK-UP BLOCK
(KMS-262E)
VCC
VC
DETECTOR
IC101
RF AMP
RF
FE
TE
SE
ABCD
AUX
PEAK
BOTM
ADFG
SWDT
SCLK
XLAT
FCONT
APC REF
RFI
DTRF
CLRF
XLRF
APCR
ILCC
Q202,203
LD
DRIVE
APC
LD
PD
LASER
DIODE
Q201
LASER ON
SWITCH
LD
POWER
VR
HF
MODULE
MOD
Q701-704
HF MOD
SWITCH
IC401
MOTOR/COIL DRIVE
FOCUS
COIL
TRACKING
COIL
OUT3F
OUT3R
OUT1F
OUT1R
OUT2F
OUT2R
OUT4F
OUT4R
IN3F
IN3R
IN1F
IN1R
IN2F
IN2R
IN4F
IN4R
PSB
FFDR
FRDR
TFDR
TRDR
SFDR
SRDR
SPRD
SPFD
M102
(SLED)
M101
(SPINDLE)
IC702 (1/2)
MD MASTER CONTROLLER
SWDT
SCLK
XLAT
SRDT
SENS
XINT
DQSY
SQSY
MNT1
MNT2
IC152
DRAM
D0
D3
A00
A10
XOE
XWE
XRAS
XCAS
OSC
RPWR
XRST
IC803
VCO
X804
11.2896MHz
X722
32.768kHz
X721
10MHz
XCIN
XCOUT
XIN
XOUT
D.RST
IOP
LDON
WRPWR
MOD
IC701
AMP
IC933
+3.3V
REG
+5V
IC926
+2.6V
REG
IC195
EEPROM
SDA
SCL
EEP-WP
LIMIT-IN
OUT-SW
PLAY-SW
REC-SW
REFELECT
PROTECT
S101
(LIMIT IN)
S103
(OUT)
S104
(PLAY)
S105
(REC)
S102
(REFLECT/PROTECT)
IC781
MOTOR
DRIVE
LOAD-IN
LOAD-OUT
LOAD-LO
IN1
IN2
OUT1
OUT2
VC
M103
(LOADING)
Q781
SWITCH
S.RST
Q721
SWITCH
IC721
RESET
BU +3.3V
• Signal Path
: PB(MD)
: REC(MD)
: USB

– USB Section –

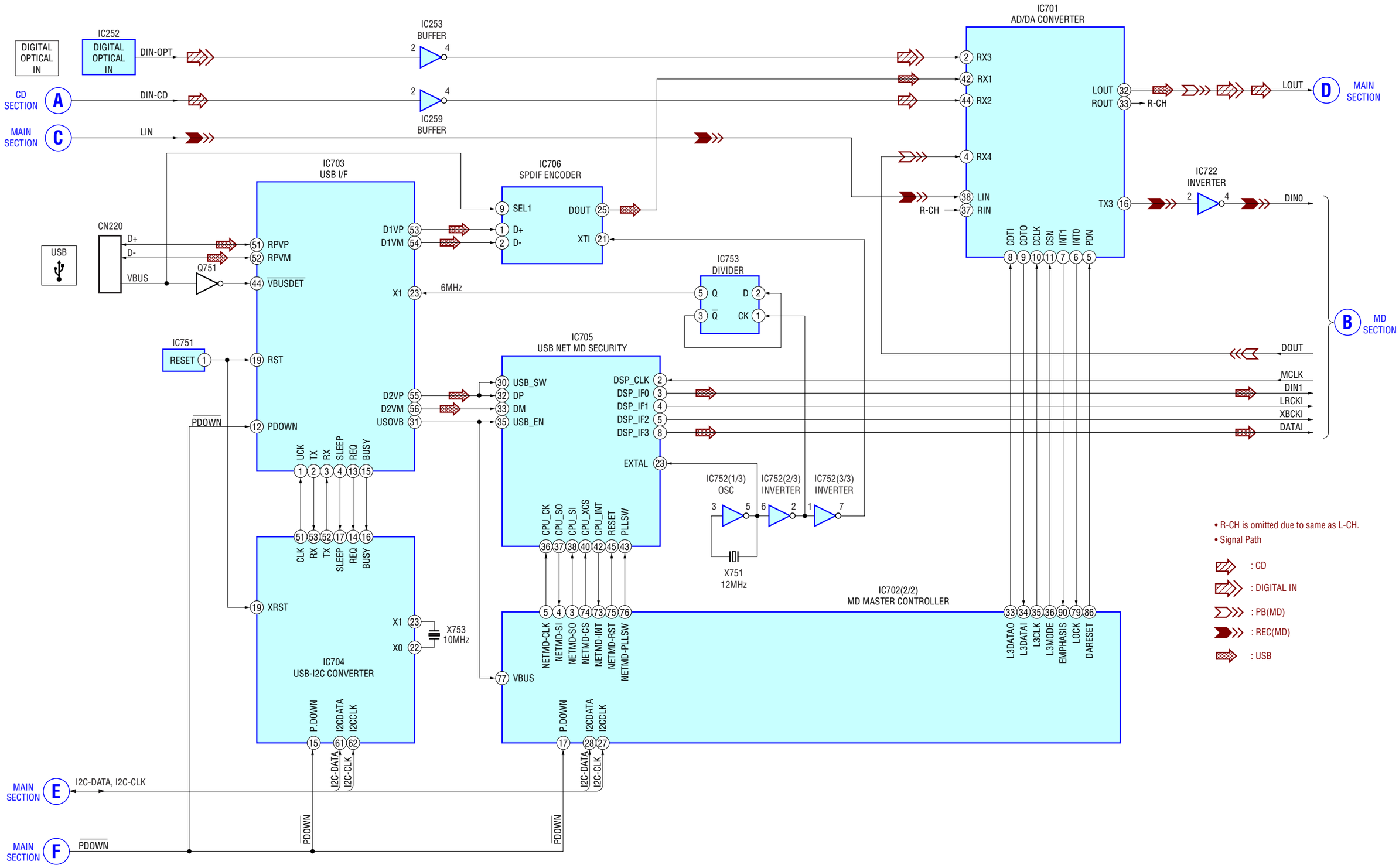
DIGITAL OPTICAL IN
IC252
DIGITAL OPTICAL IN
DIN-OPT
IC253 BUFFER
CD SECTION
A
DIN-CD
IC259 BUFFER
MAIN SECTION
C
LIN
IC701
AD/DA CONVERTER
RX3
RX1
RX2
RX4
LIN
RIN
R-CH
LOUT
ROUT
R-CH
LOUT
D
MAIN SECTION
IC722 INVERTER
TX3
DIN0
CDTI
CDTO
CCLK
CSN
INT1
INT0
PDN
IC703
USB I/F
IC706
SPDIF ENCODER
SEL1
DOUT
D+
D-
XTI
D1VP
D1VM
CN220
USB
D+
D-
VBUS
Q751
RPVP
RPVM
VBUSDET
X1
6MHz
IC753
DIVIDER
Q
D
CK
IC751
RESET
RST
PDOWN
B
MD SECTION
DOUT
MCLK
DIN1
LRCKI
XBCKI
DATAI
IC705
USB NET MD SECURITY
D2VP
D2VM
USOVB
USB_SW
DP
DM
USB_EN
DSP_CLK
DSP_IF0
DSP_IF1
DSP_IF2
DSP_IF3
EXTAL
UCK
TX
RX
SLEEP
REQ
BUSY
CLK
CPU_CK
CPU_SO
CPU_SI
CPU_XCS
CPU_INT
RESET
PLLSW
IC752(1/3) OSC
IC752(2/3) INVERTER
IC752(3/3) INVERTER
X751
12MHz
XRST
X1
X0
X753
10MHz
IC704
USB-I2C CONVERTER
VBUS
NETMD-CLK
NETMD-SI
NETMD-SO
NETMD-CS
NETMD-INT
NETMD-RST
NETMD-PLLSW
IC702(2/2)
MD MASTER CONTROLLER
L3DATAO
L3DATAI
L3CLK
L3MODE
EMPHASIS
LOCK
DARESET
P.DOWN
I2CDATA
I2CCLK
I2C-DATA
I2C-CLK
MAIN SECTION
E
I2C-DATA, I2C-CLK
MAIN SECTION
F
PDOWN
• R-CH is omitted due to same as L-CH.
• Signal Path
: CD
: DIGITAL IN
: PB(MD)
: REC(MD)
: USB

– MAIN Section –

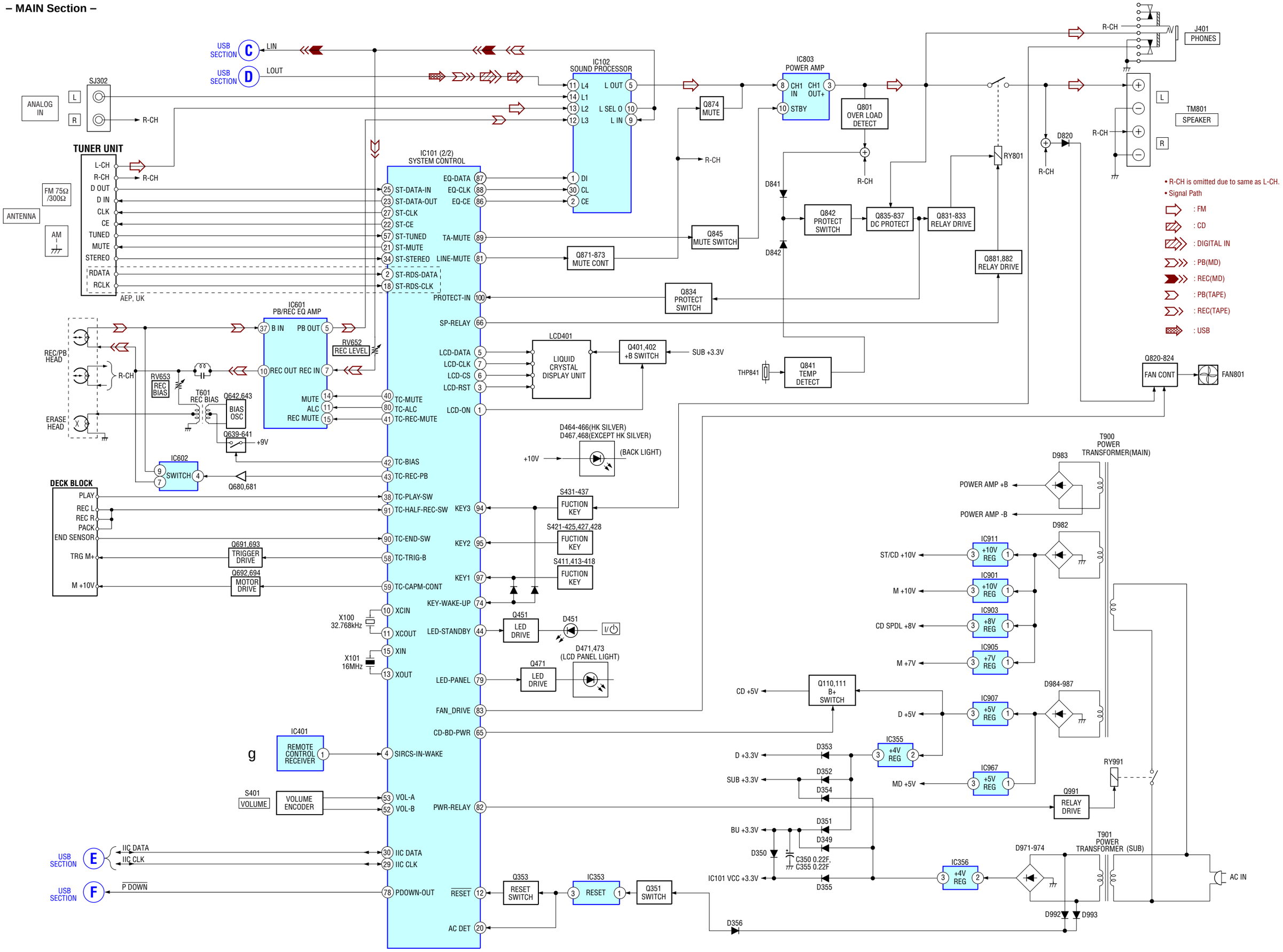

6-3. Printed Wiring Board – BD (CD) Board – • See page 47 for Circuit Boards Location. • **: Uses unleaded solder.**

【BD (CD) BOARD】(SIDE A)

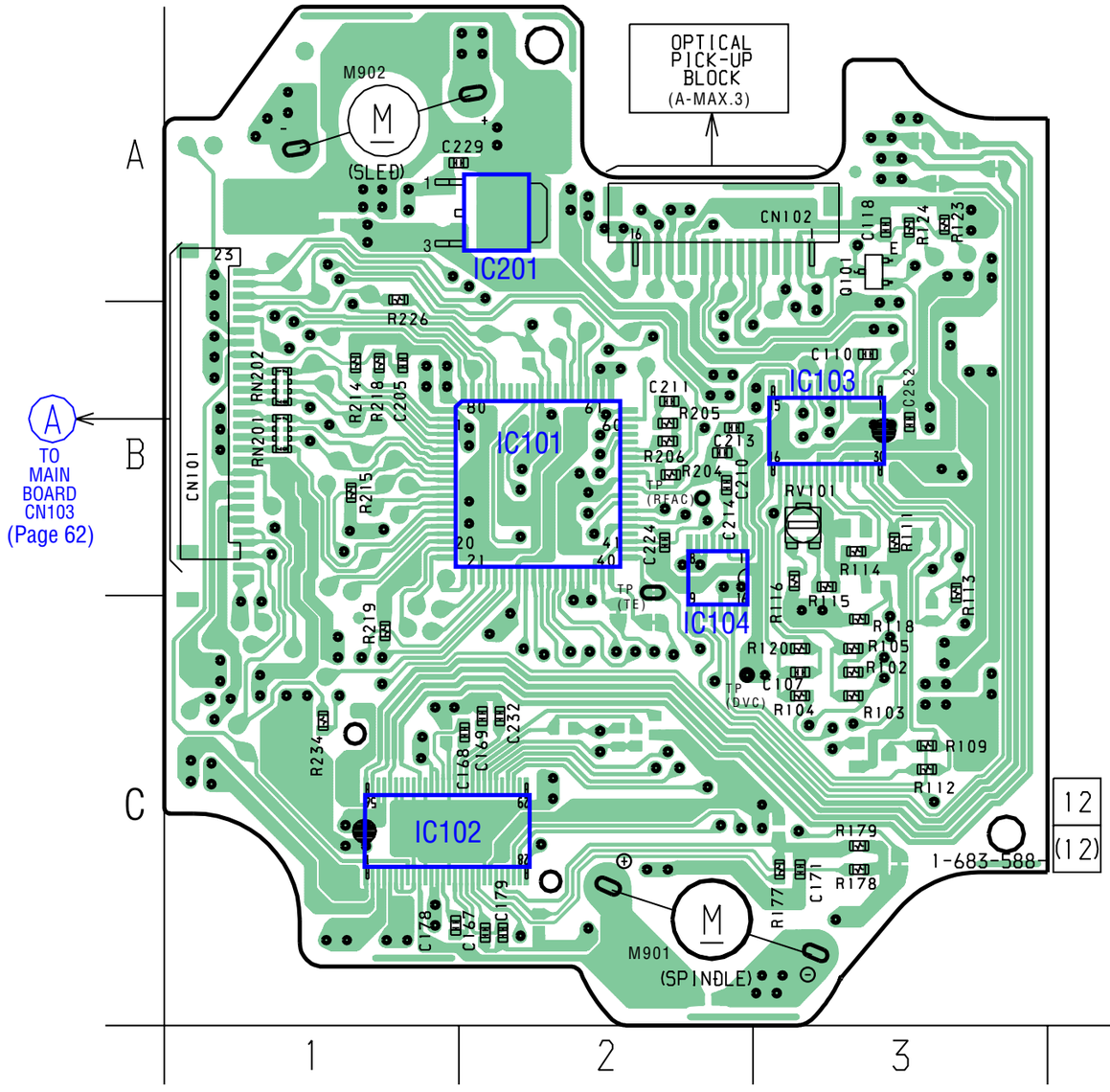

【BD (CD) BOARD】(SIDE B)

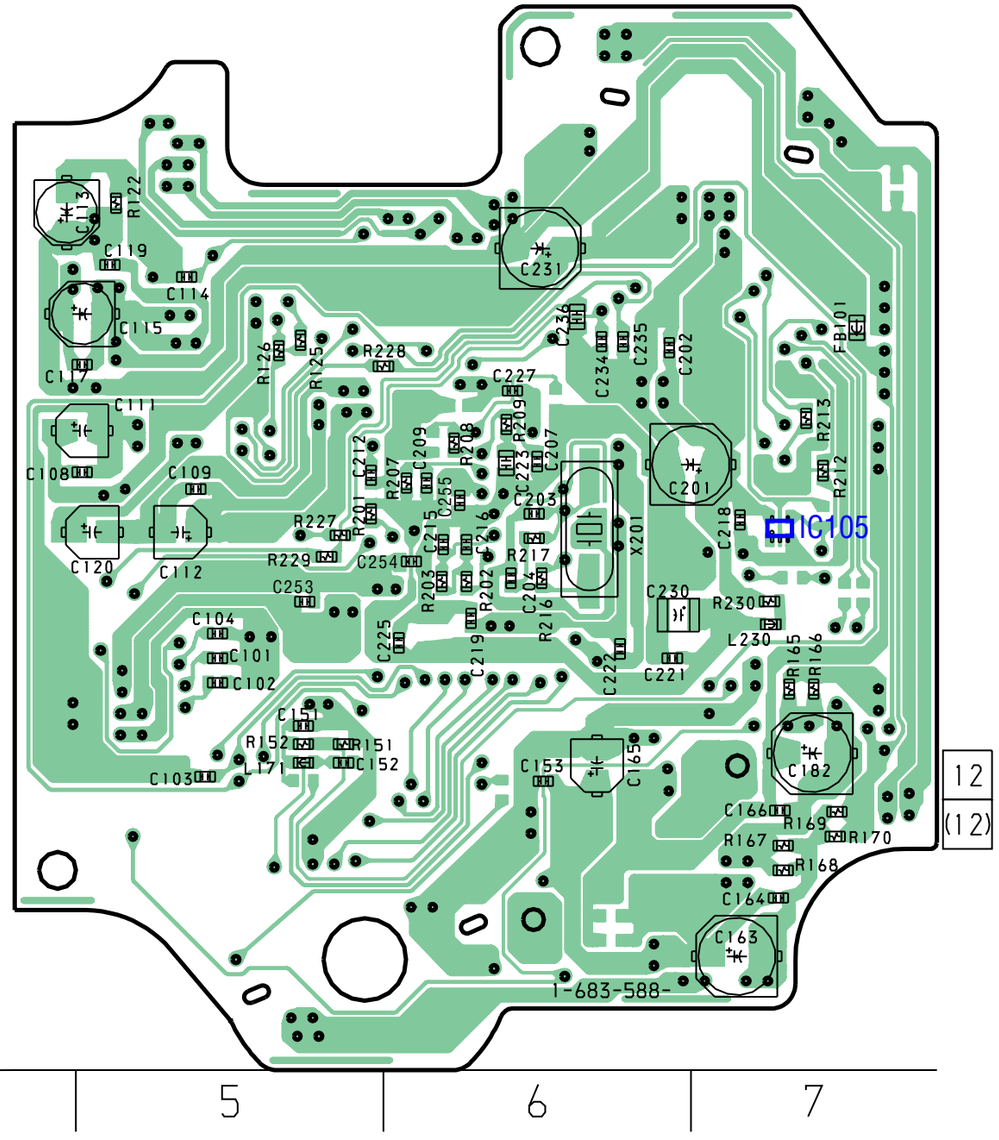

• **Semiconductor Location**

Ref. No.	Location
IC101	B-2
IC102	C-1
IC103	B-3
IC104	C-2
* IC105	B-7
IC201	A-2
Q101	A-3

* SIDE B

6-4. Schematic Diagram – BD (CD) Board –

• See page 76-77 for IC Block Diagrams. • See page 47 for Waveforms.

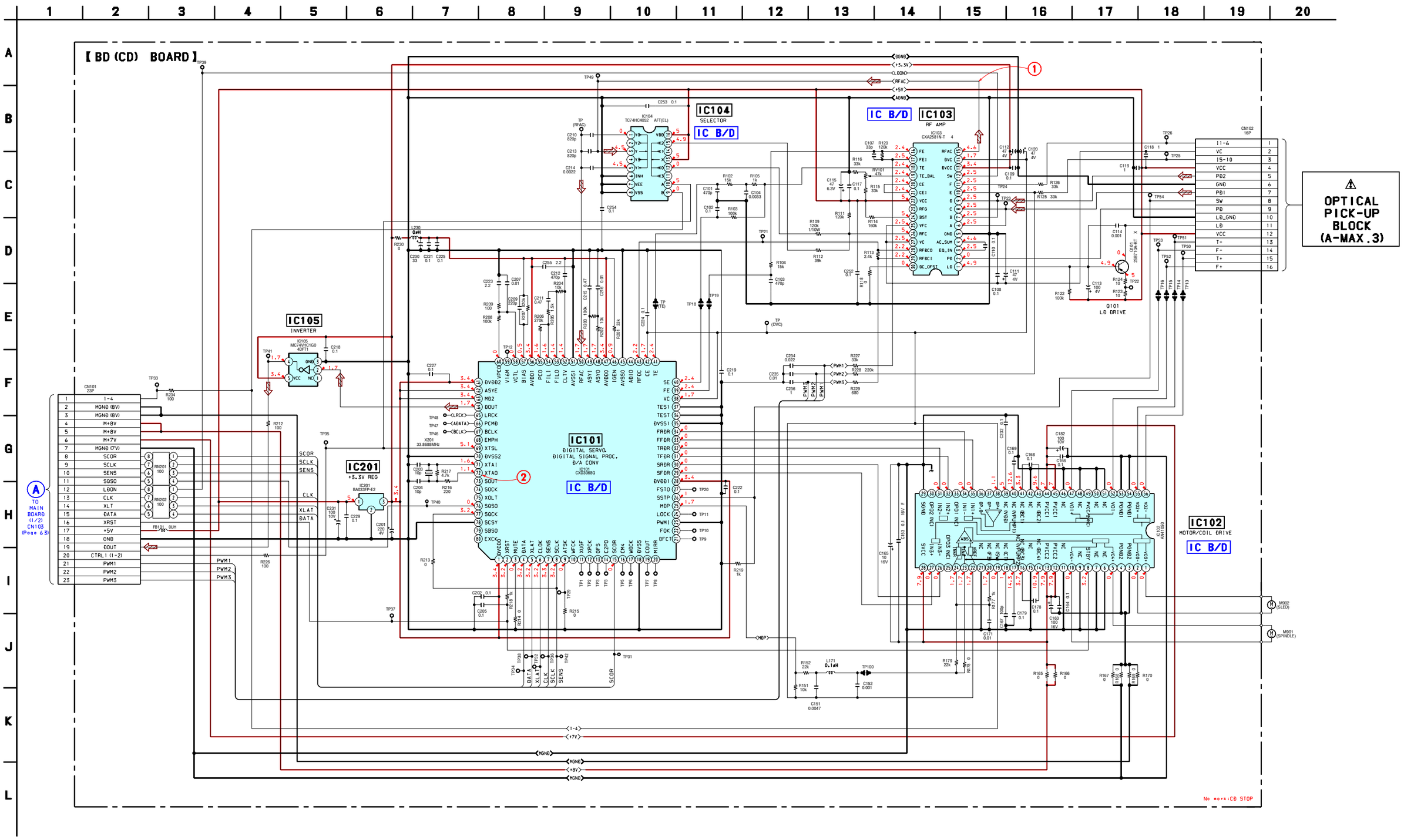

6-5. Printed Wiring Board – BD (MD) Board – • See page 47 for Circuit Boards Location. • **: Uses unleaded solder.**

【BD (MD) BOARD】(SIDE A)

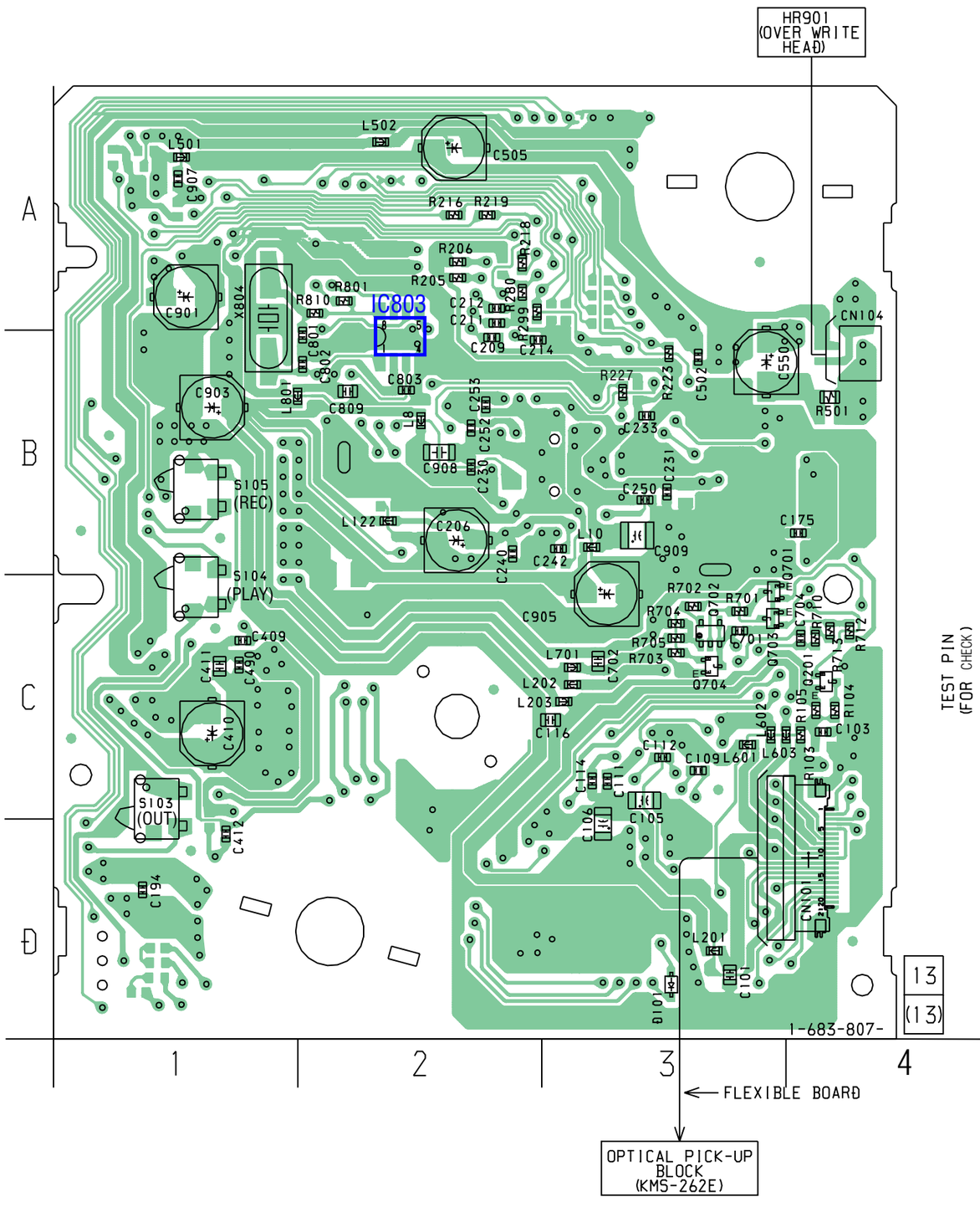

【BD (MD) BOARD】(SIDE B)

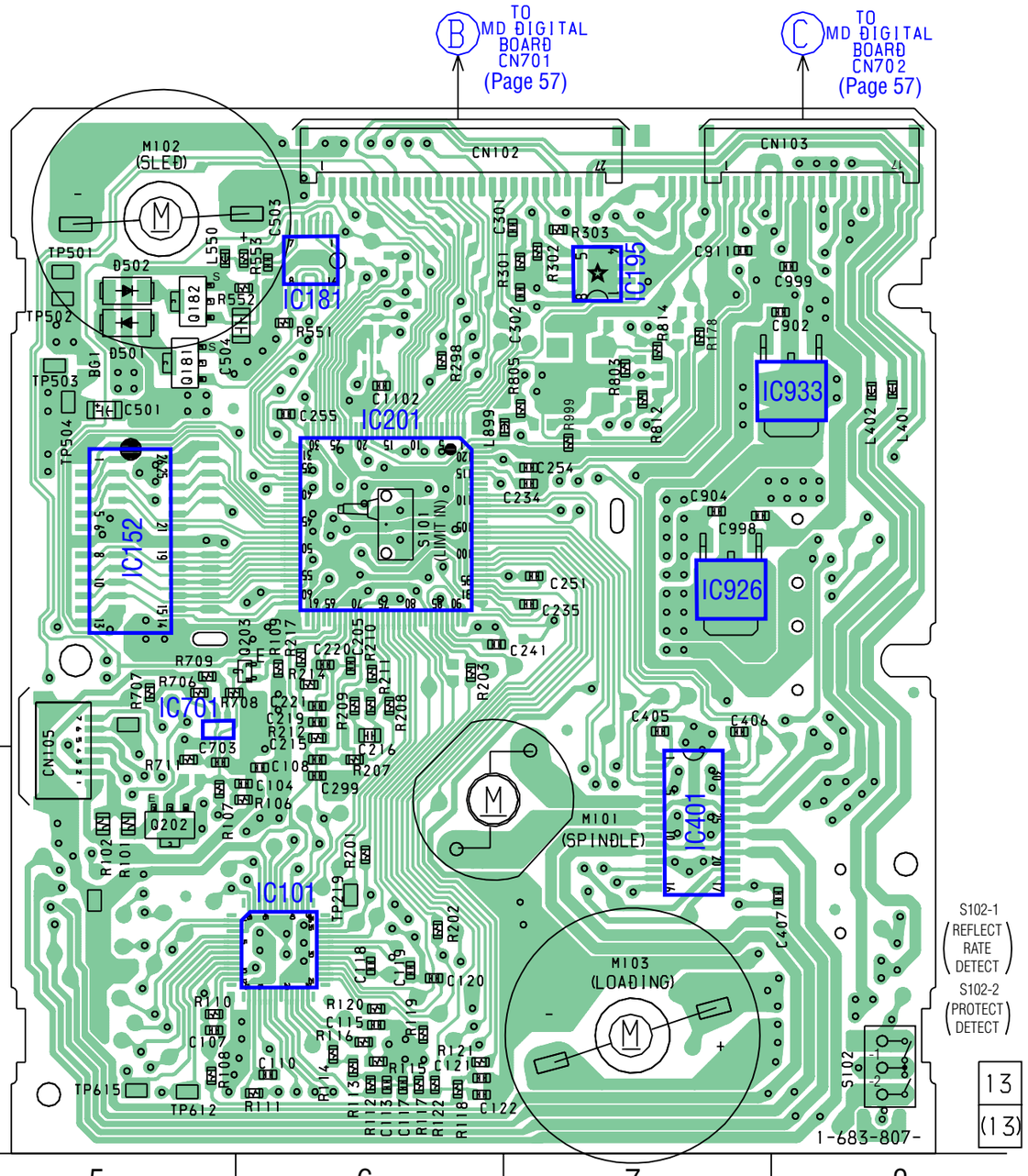

• **Semiconductor Location**

Ref. No.	Location	Ref. No.	Location	Ref. No.	Location
* D501	A-5	* IC401	C-7	Q201	C-4
* D502	A-5	* IC701	C-5	* Q202	C-5
		IC803	A-2	* Q203	B-6
* IC101	C-6	* IC926	B-7	Q701	C-3
* IC152	B-5	* IC933	B-8	Q702	C-3
* IC181	A-6			Q703	C-3
* IC195	A-7	* Q181	A-5	Q704	C-3
* IC201	B-6	* Q182	A-5		

* SIDE B

6-6. Schematic Diagram – BD (MD) Board (1/2) –

• See page 78,80 for IC Block Diagrams. • See page 47 for Waveforms.

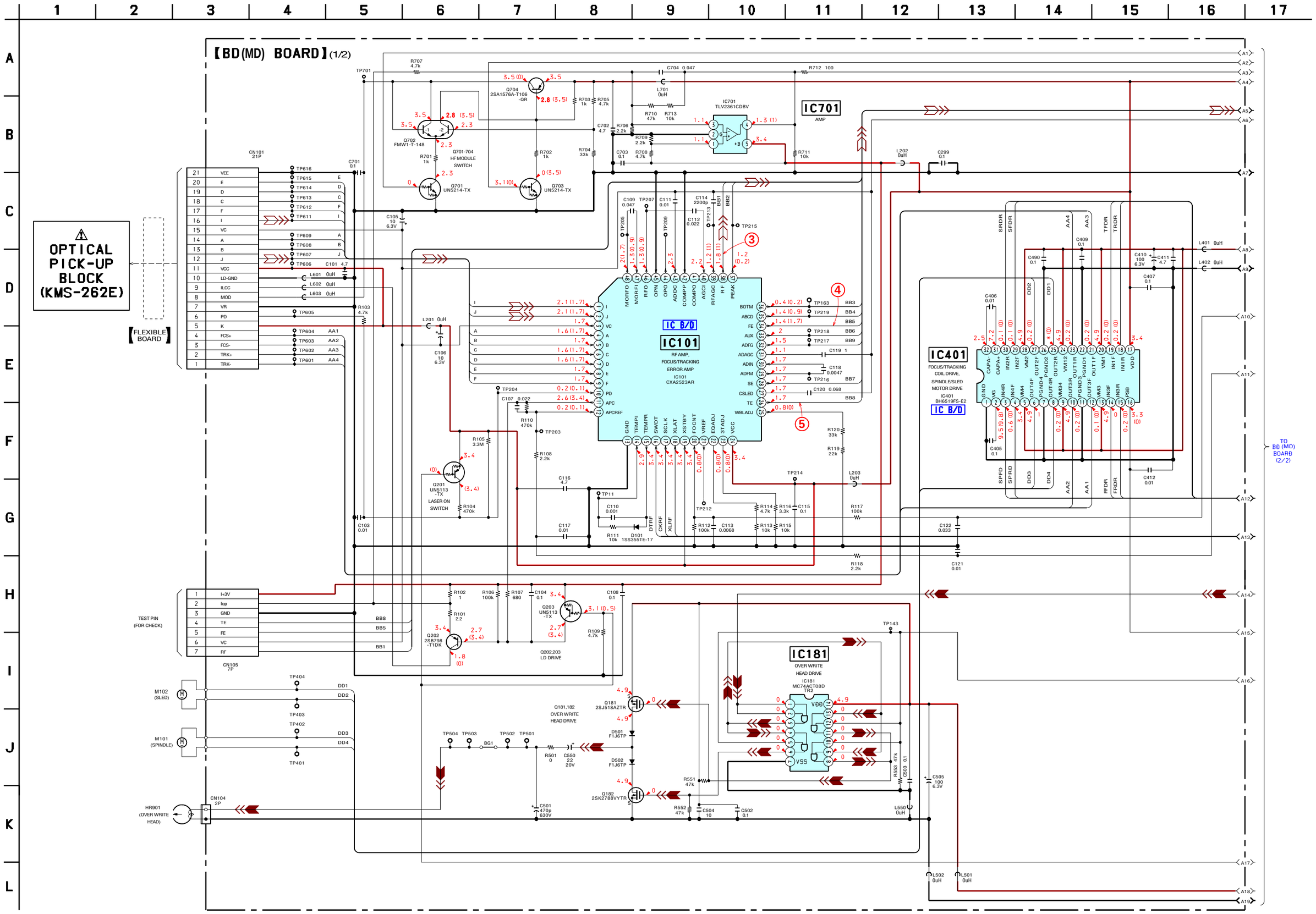

No mark : MD STOP
( ) : MD PLAY

6-7. Schematic Diagram – BD (MD) Board (2/2) –

• See page 79 for IC Block Diagrams. • See page 47 for Waveforms.

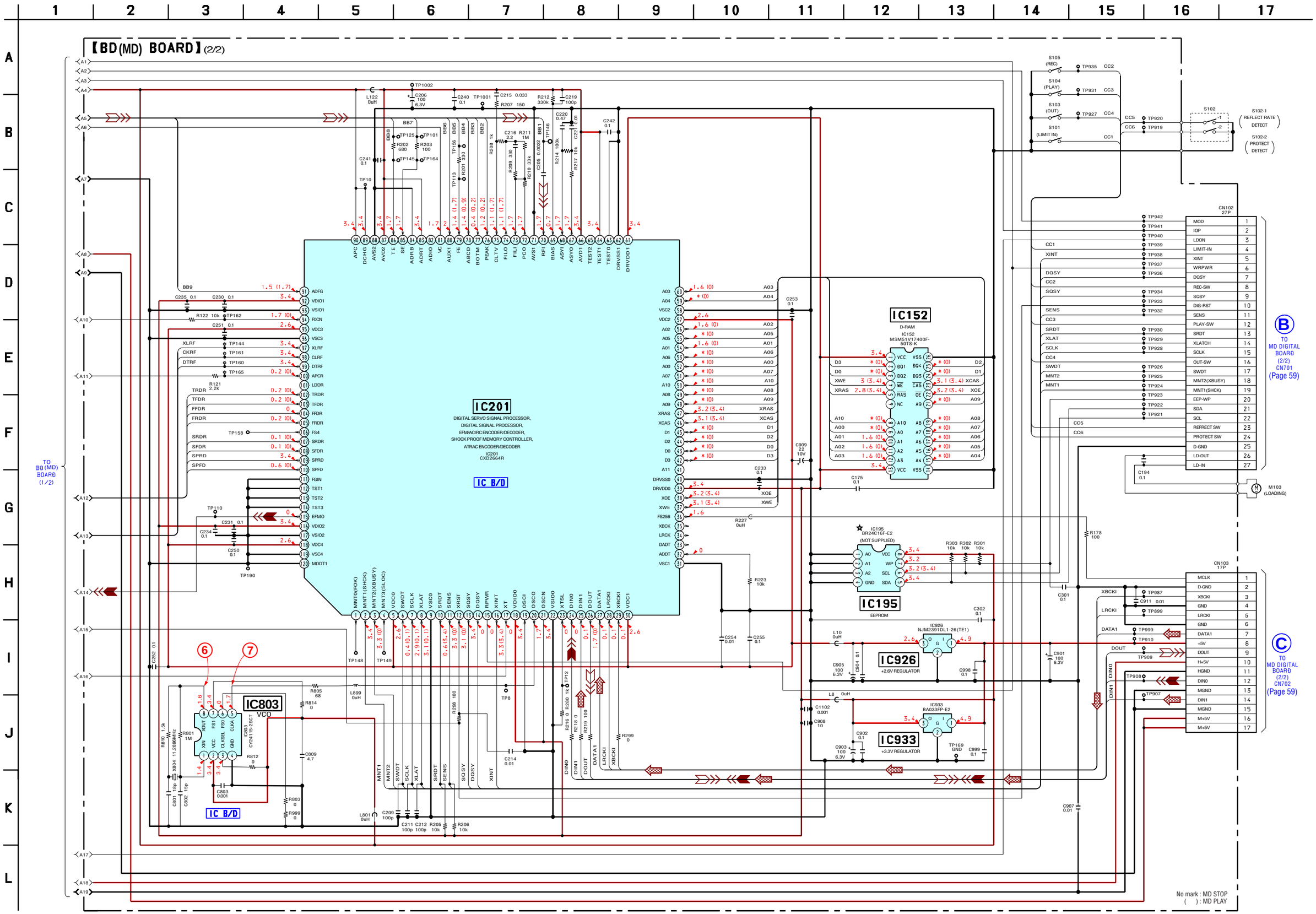

6-8. Printed Wiring Board – MD DIGITAL Board –

• See page 47 for Circuit Boards Location.

【MD DIGITAL BOARD】(SIDE A)

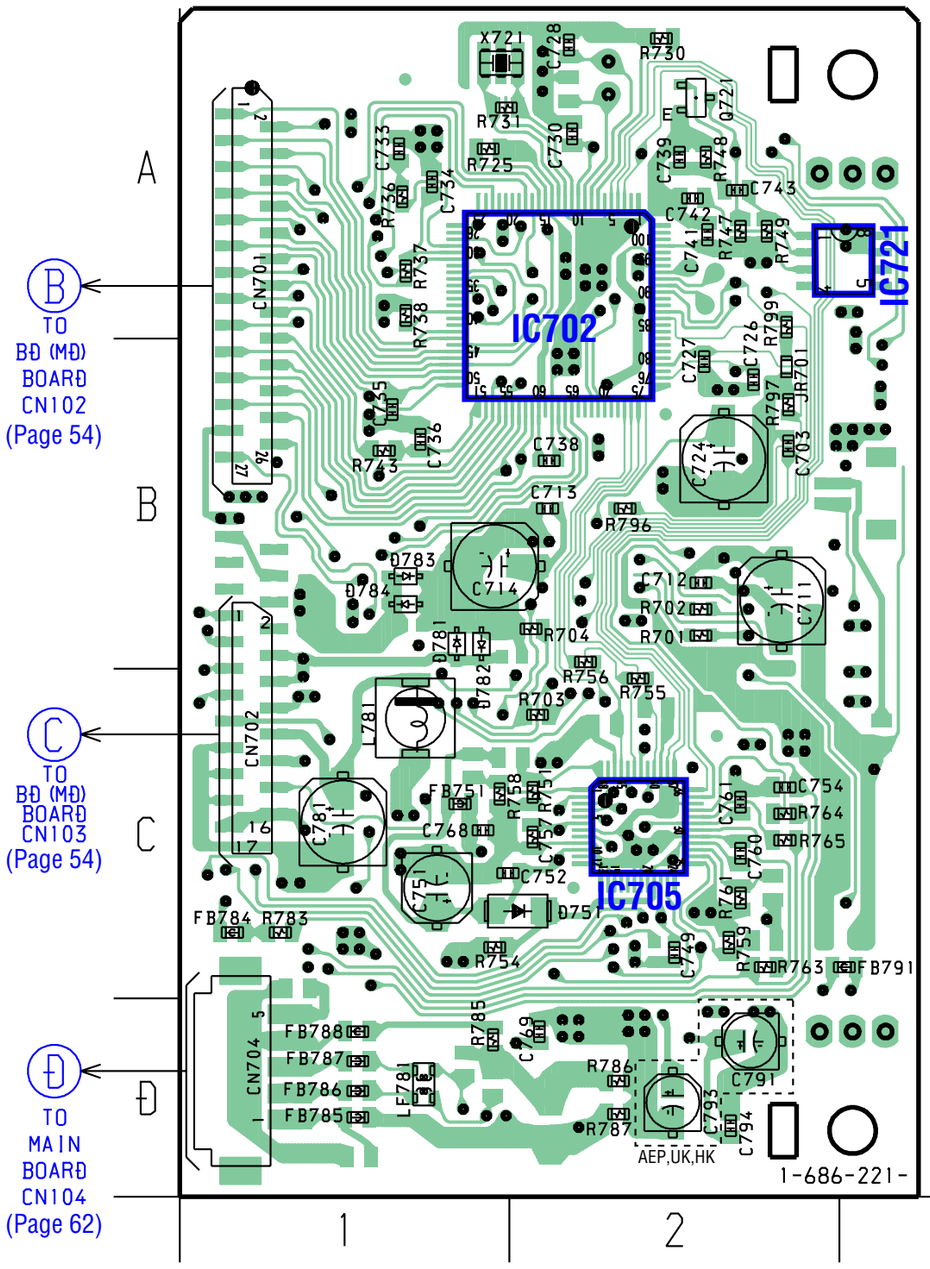

【MD DIGITAL BOARD】(SIDE B)

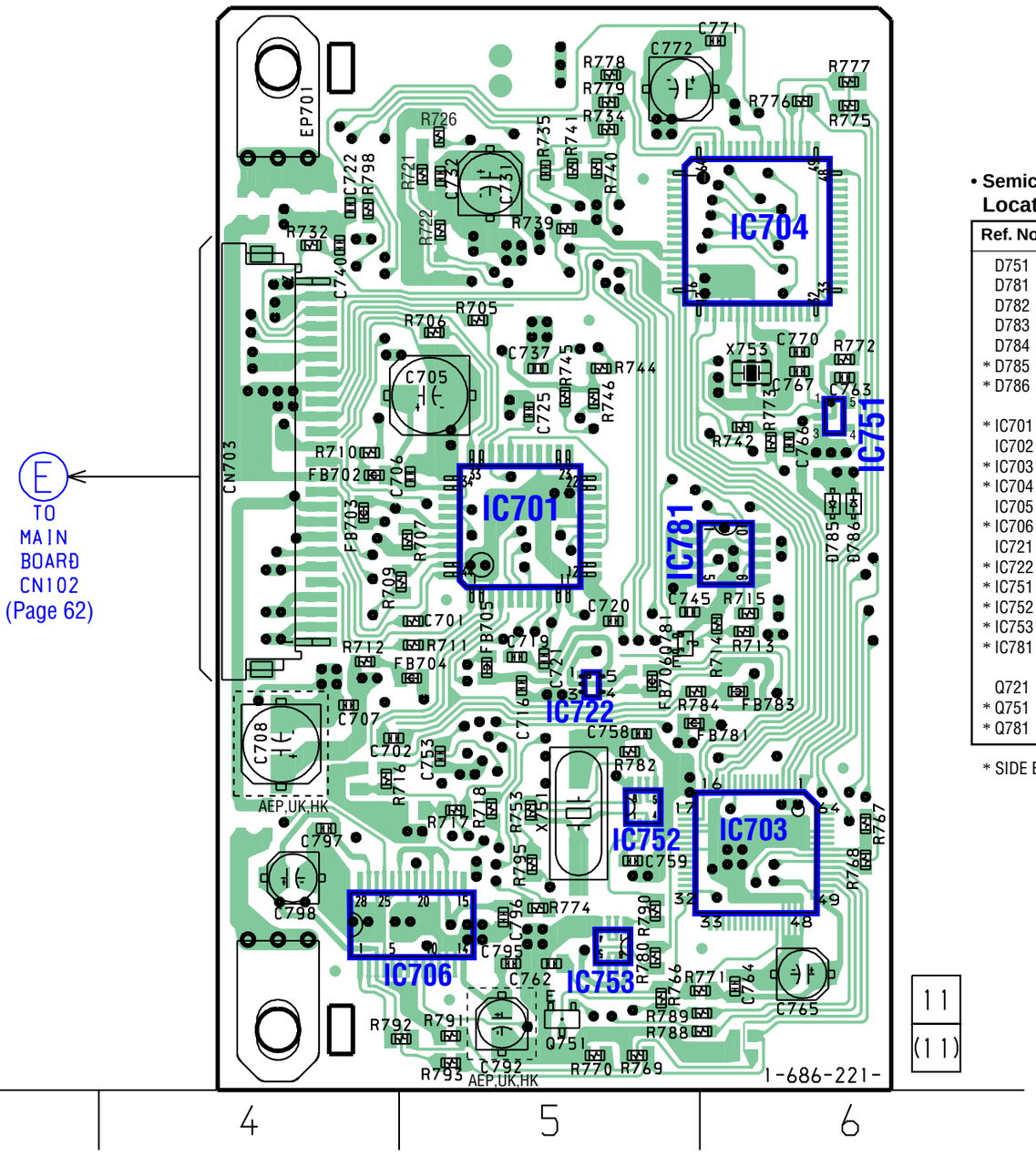

• **Semiconductor Location**

Ref. No.	Location
D751	C-2
D781	B-1
D782	B-1
D783	B-1
D784	B-1
* D785	B-6
* D786	B-6
* IC701	B-5
IC702	A-2
* IC703	C-6
* IC704	A-6
IC705	C-2
* IC706	D-5
IC721	A-3
* IC722	C-5
* IC751	B-6
* IC752	C-5
* IC753	D-5
* IC781	B-6
Q721	A-2
* Q751	D-5
* Q781	C-5

* SIDE B

6-9. Schematic Diagram – MD DIGITAL Board (1/2) –

• See page 81-83 for IC Block Diagrams. • See page 87 for IC Pin Function Descriptions. • See page 47 for Waveforms.

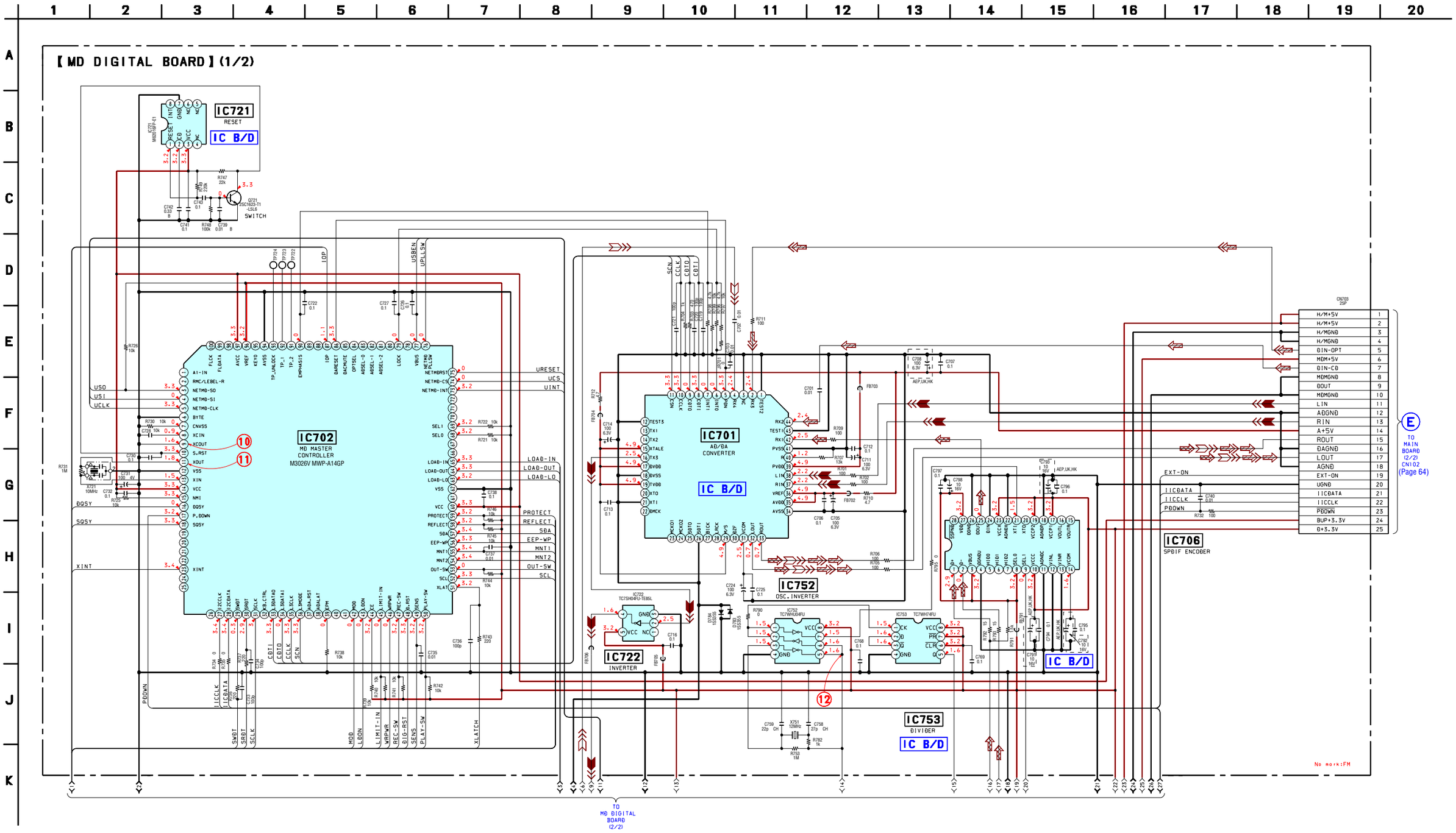

6-10. Schematic Diagram – MD DIGITAL Board (2/2) – • See page 81,83 for IC Block Diagrams. • See page 87,89 for IC Pin Function Descriptions. • See page 47 for Waveforms.

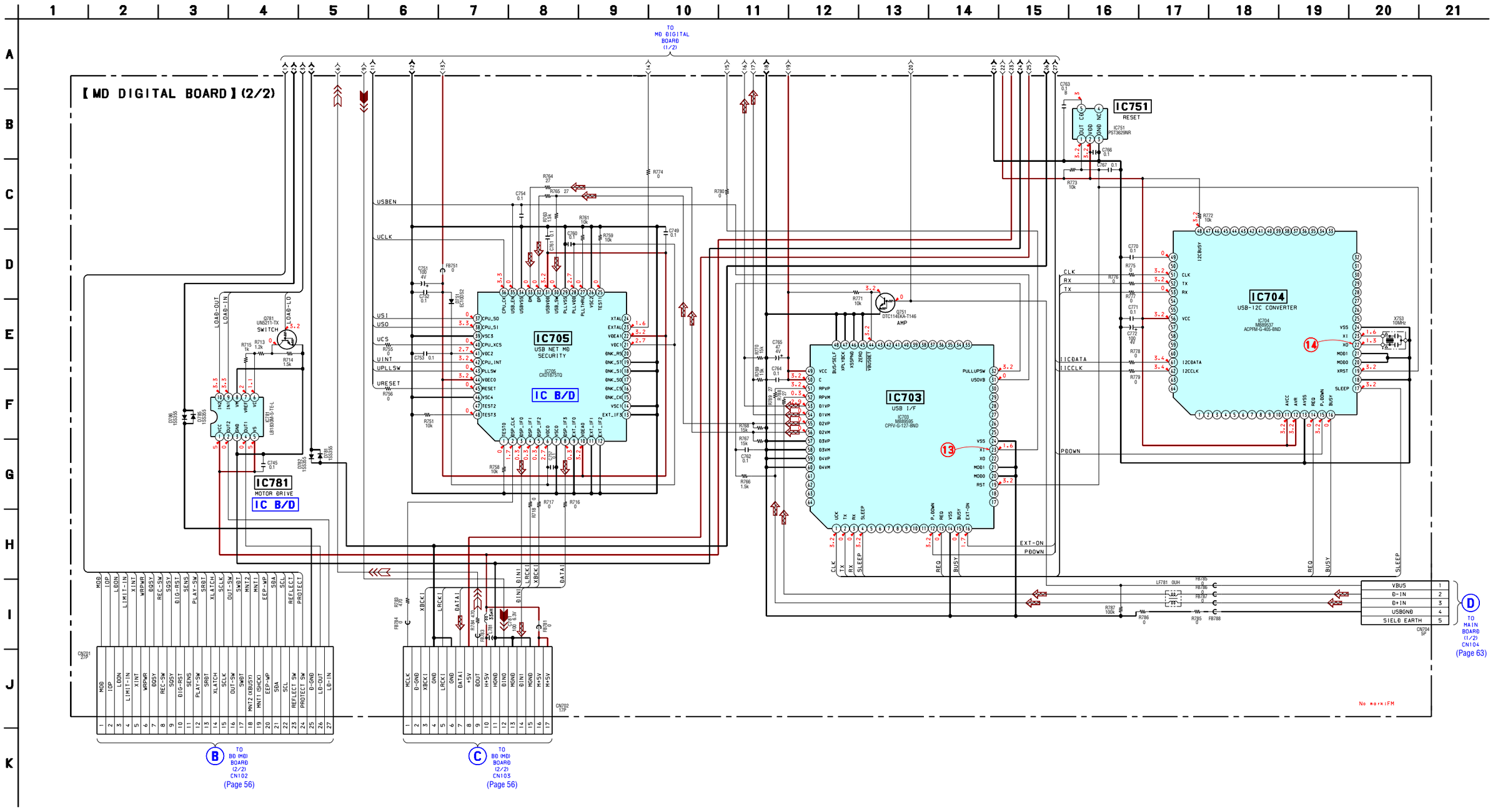

6-11. Printed Wiring Board – TC Board – • See page 47 for Circuit Boards Location. • **: Uses unleaded solder.**

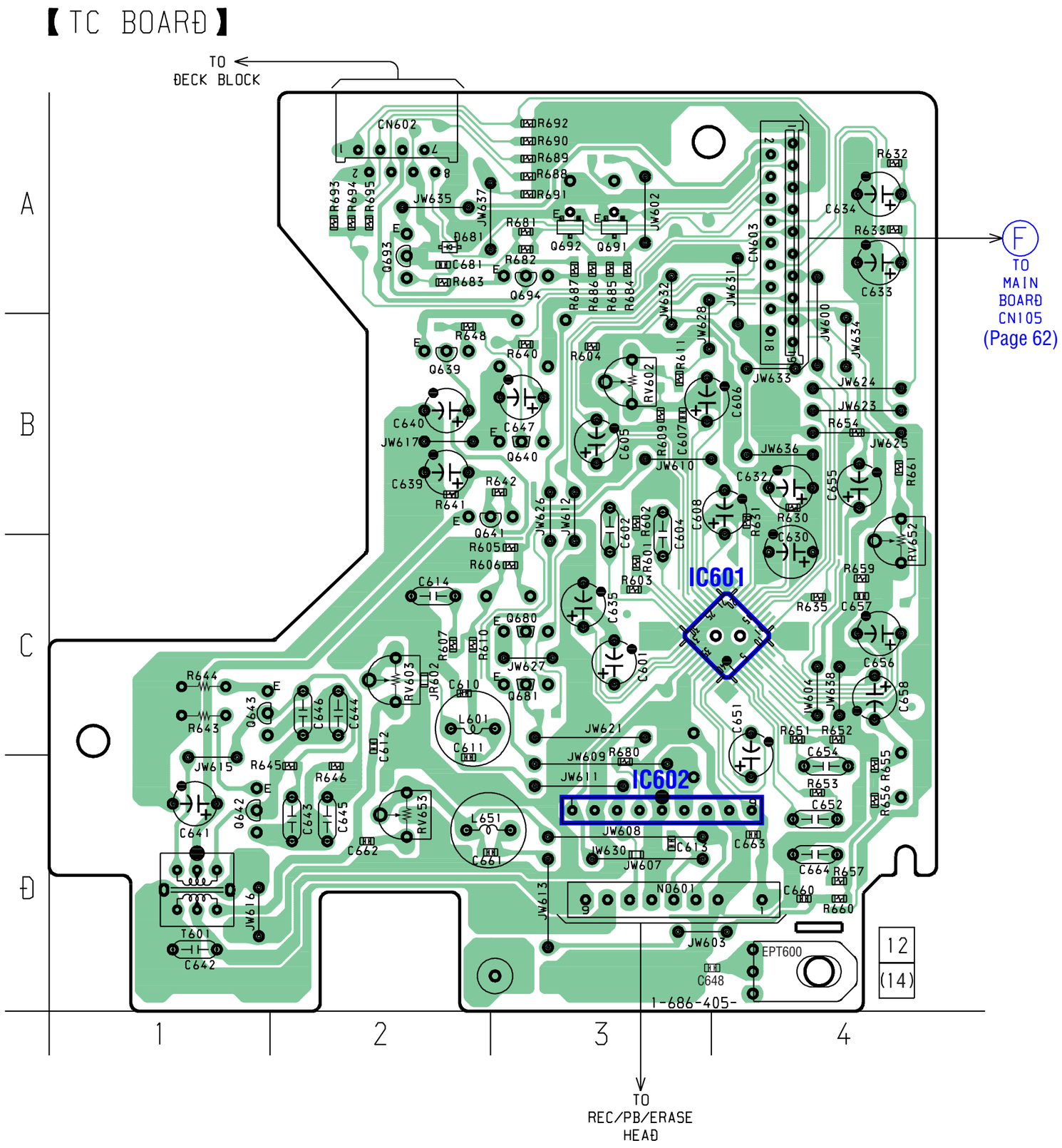

• **Semiconductor Location**

Ref. No.	Location
D681	A-2
IC601	C-4
IC602	D-3
Q639	B-2
Q640	B-3
Q641	B-3
Q642	D-1
Q643	C-1
Q680	C-3
Q681	C-3
Q691	A-3
Q692	A-3
Q693	A-2
Q694	A-3

6-12. Schematic Diagram – TC Board –

• See page 47 for Waveforms.

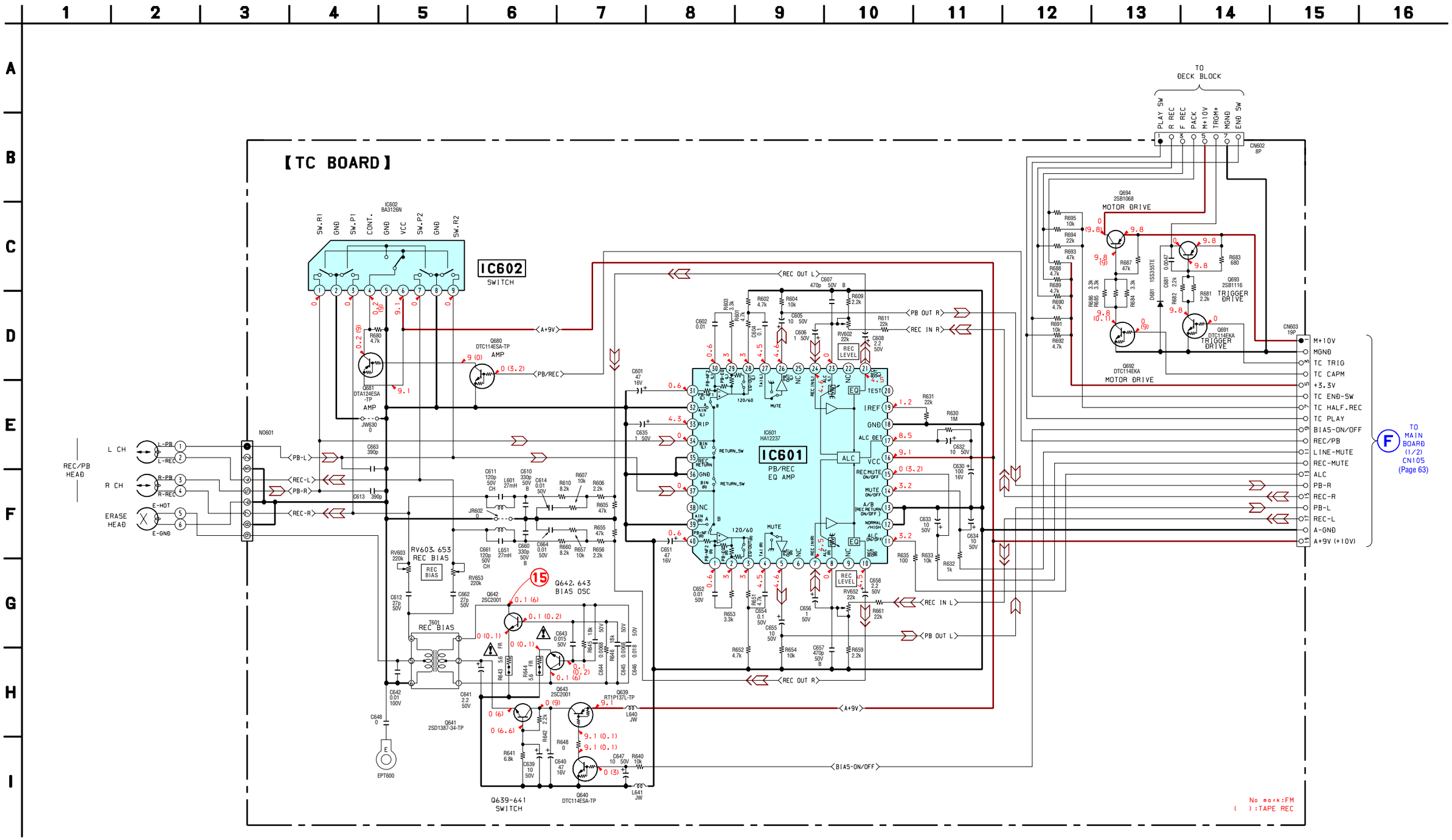

6-13. Printed Wiring Board – MAIN Section –

• See page 47 for Circuit Boards Location. • : Uses unleaded solder.

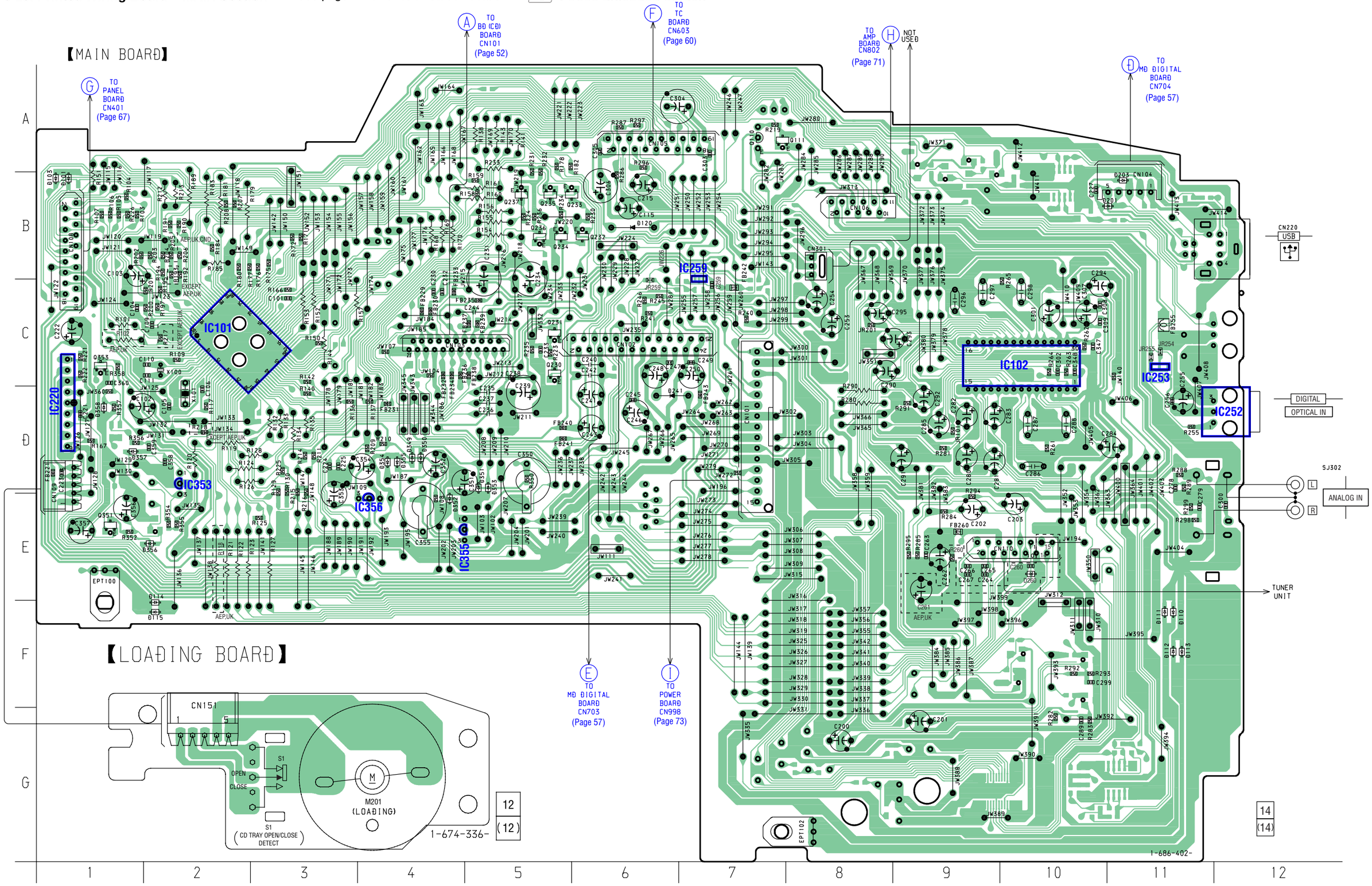

• Semiconductor Location

Ref. No.	Location	Ref. No.	Location	Ref. No.	Location	Ref. No.	Location	Ref. No.	Location	Ref. No.	Location	Ref. No.	Location	Ref. No.	Location
D101	B-1	D114	F-2	D349	D-4	D355	D-4	IC102	C-10	IC355	E-5	Q231	C-5	Q237	B-5
D103	B-1	D115	F-2	D350	D-4	D356	E-2	IC220	D-1	IC356	E-4	Q232	B-6	Q351	E-1
D110	F-11	D120	B-6	D351	D-5	D357	D-1	IC252	D-12			Q233	B-6	Q353	C-1
D111	F-11	D201	B-11	D352	E-4	D358	D-1	IC253	C-11	Q110	A-7	Q234	B-5		
D112	F-11	D203	B-11	D353	D-5			IC259	B-7	Q111	A-8	Q235	B-5		
D113	F-11	D241	D-7	D354	D-4	IC101	C-2	IC353	D-2	Q230	C-5	Q236	B-5		

6-14. Schematic Diagram – MAIN Section (1/2) –

• See page 84 for IC Block Diagrams.

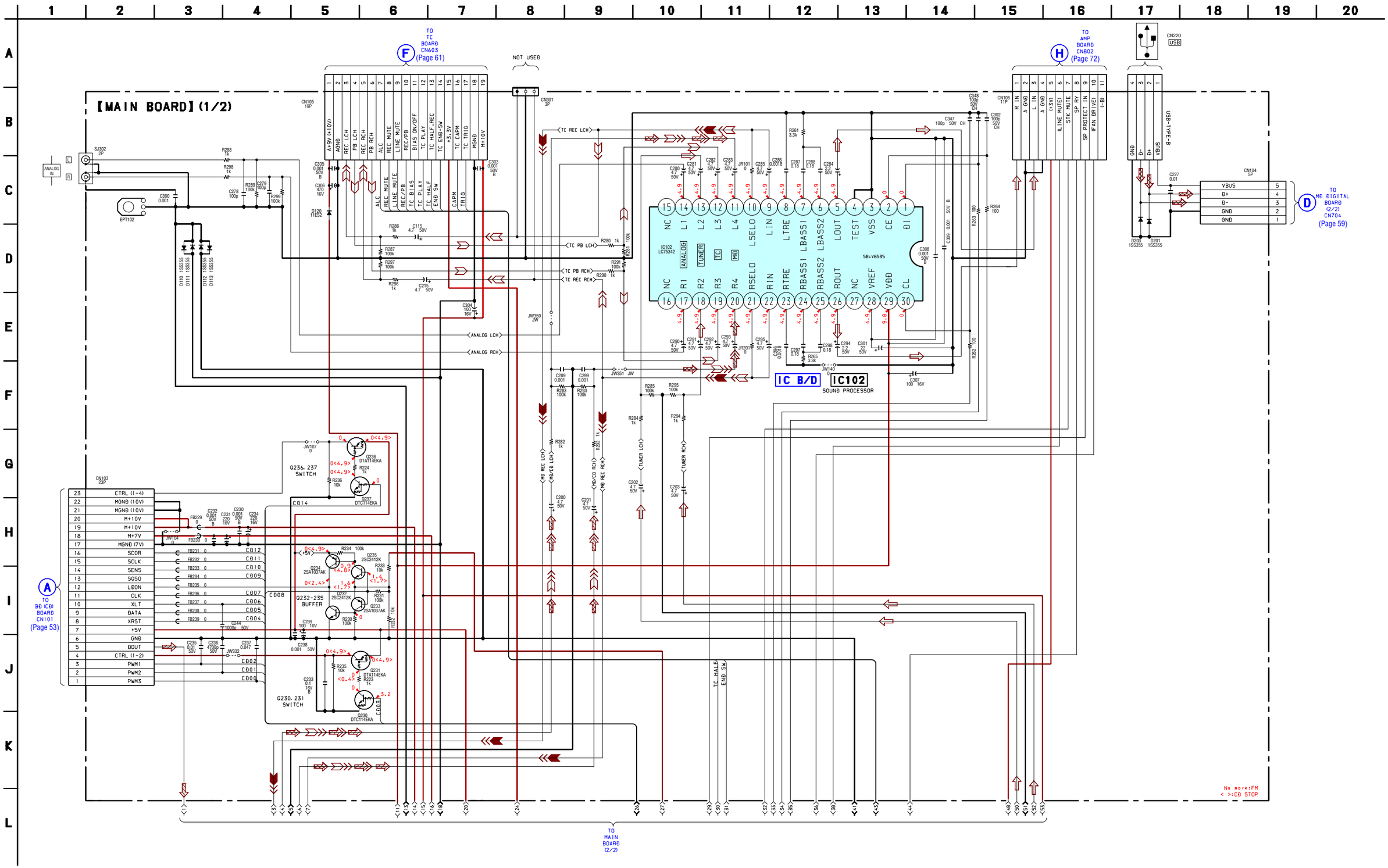

6-15. Schematic Diagram – MAIN Section (2/2) –

• See page 84 for IC Block Diagrams. • See page 85 for IC Pin Function Descriptions. • See page 47 for Waveforms.

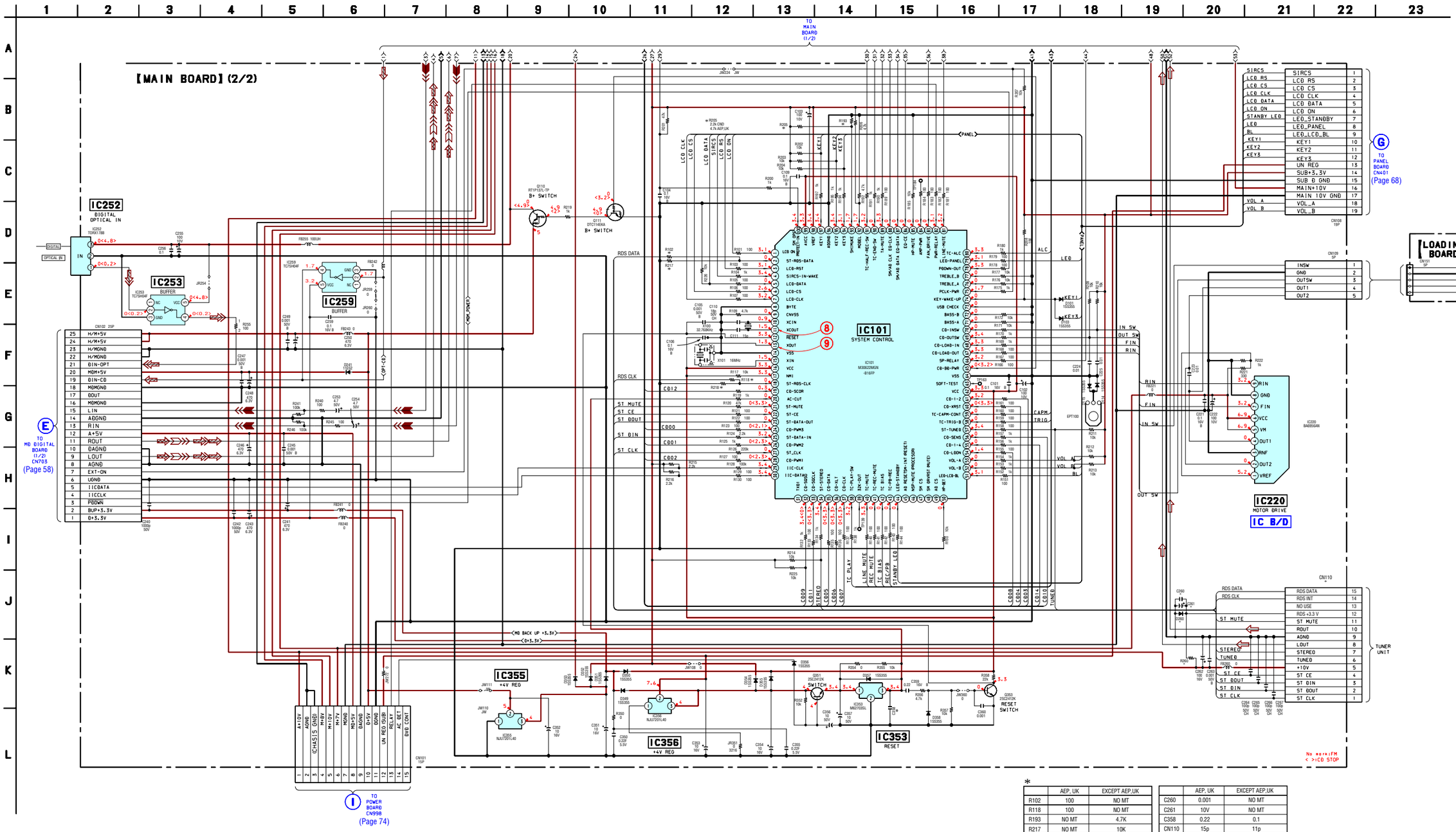

*

	AEP, UK	EXCEPT AEP,UK
R102	100	NO MT
R118	100	NO MT
R193	NO MT	4.7K
R217	NO MT	10K
R218	NO MT	10K
R260	0	NO MT

	AEP, UK	EXCEPT AEP,UK
C260	0.001	NO MT
C261	10V	NO MT
C358	0.22	0.1
CN110	15p	11p
D260	MA8033-TX	NO MT

6-16. Printed Wiring Board – H/P Board – • See page 47 for Circuit Boards Location. • **: Uses unleaded solder.**

【HP BOARD】

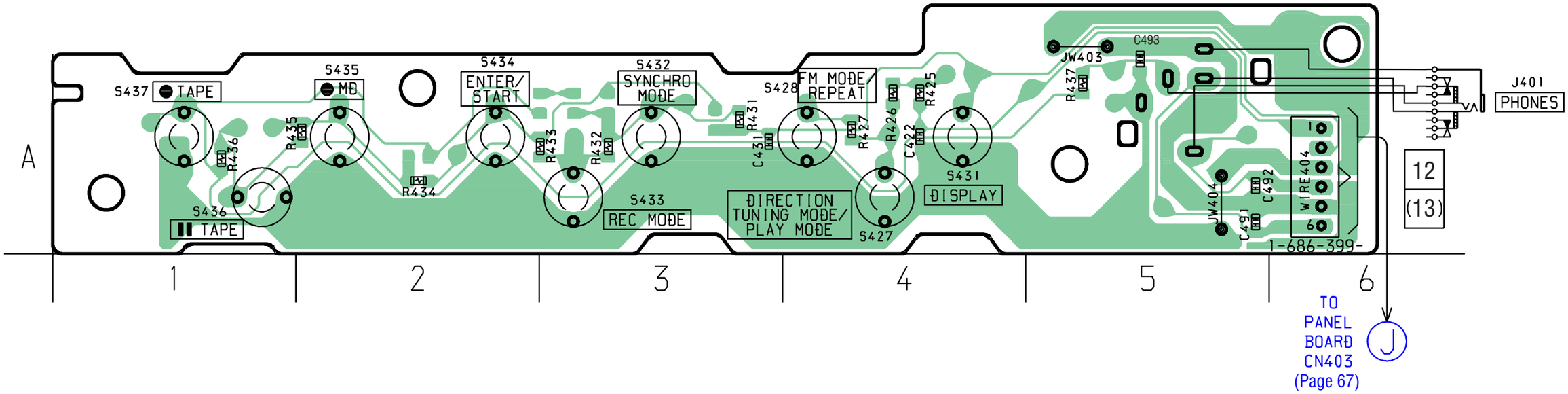

6-17. Schematic Diagram – H/P Board –

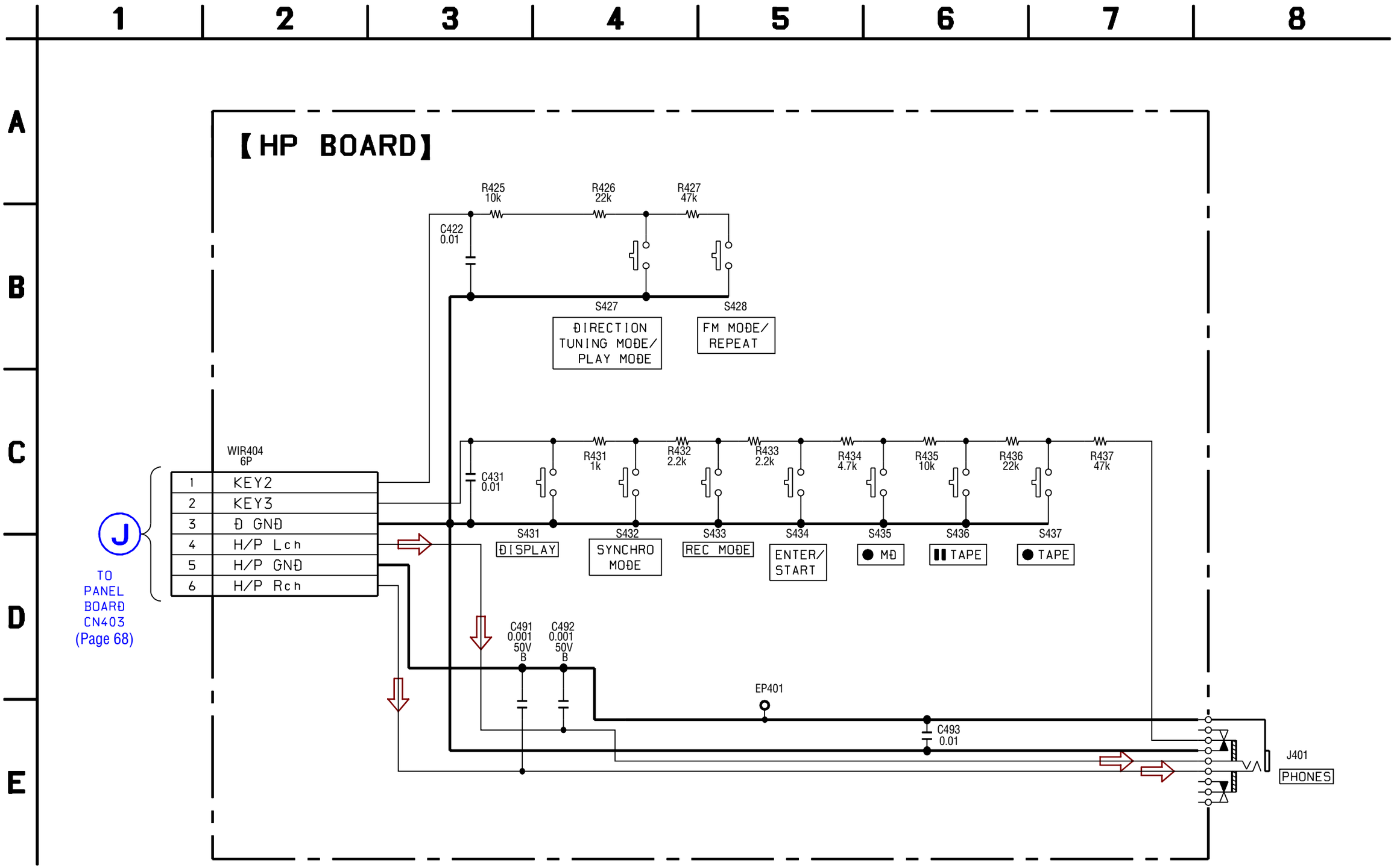

6-18. Printed Wiring Board – PANEL Section – • See page 47 for Circuit Boards Location. • **: Uses unleaded solder.**

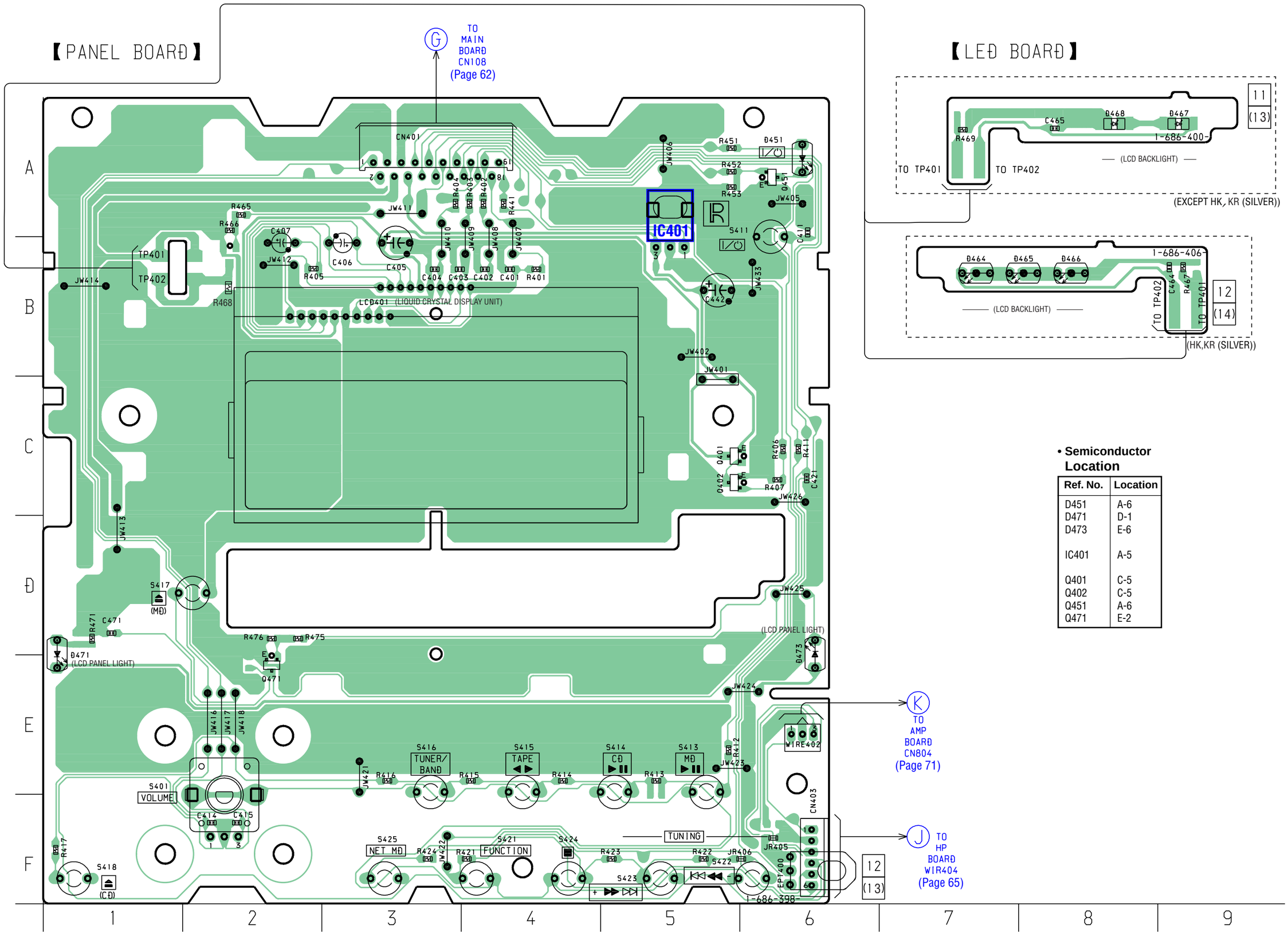

• **Semiconductor Location**

Ref. No.	Location
D451	A-6
D471	D-1
D473	E-6
IC401	A-5
Q401	C-5
Q402	C-5
Q451	A-6
Q471	E-2

6-19. Schematic Diagram – PANEL Section –

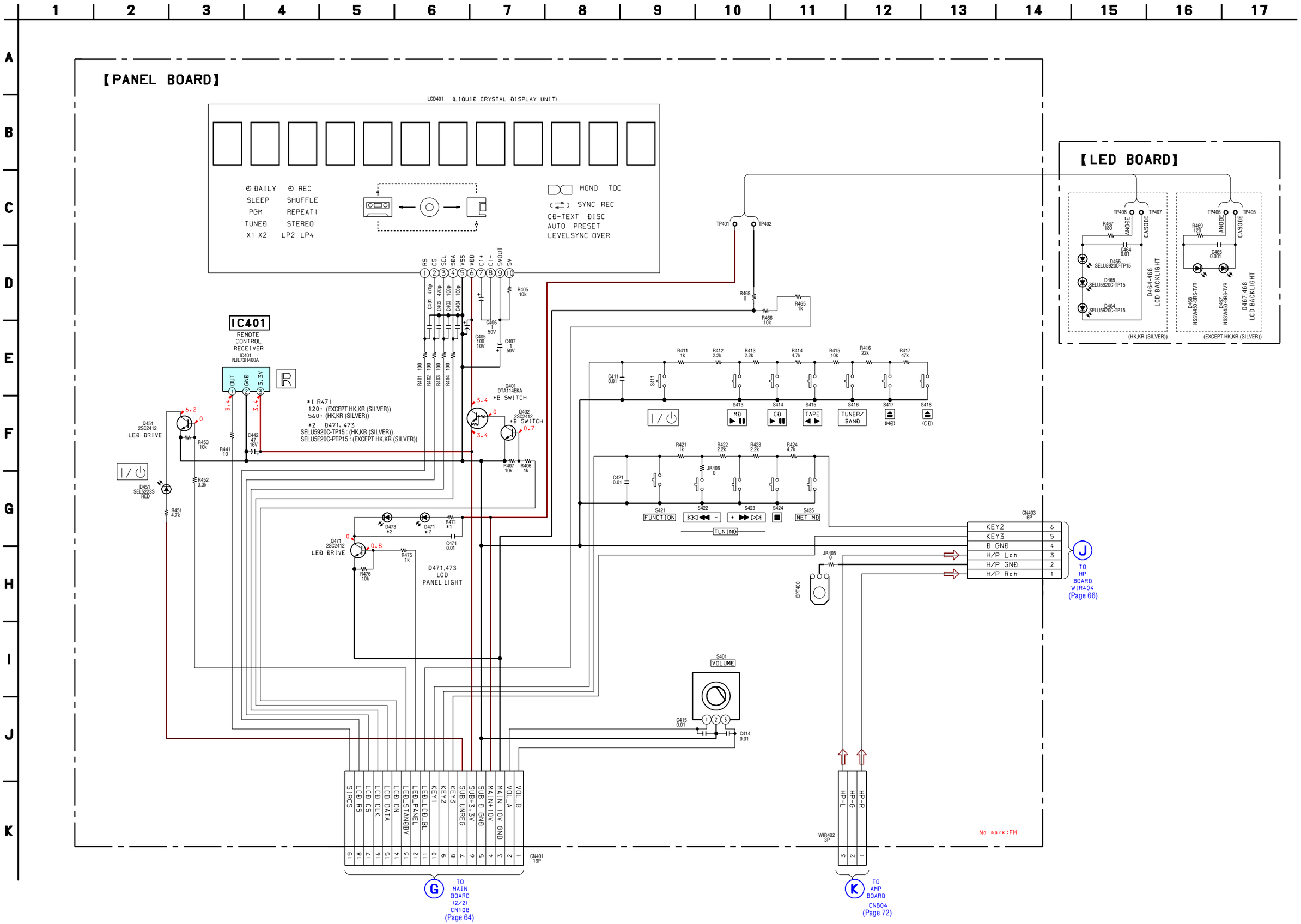

6-20. Printed Wiring Board – REG Board / TRANS Board – • See page 47 for Circuit Boards Location. • **: Uses unleaded solder.**

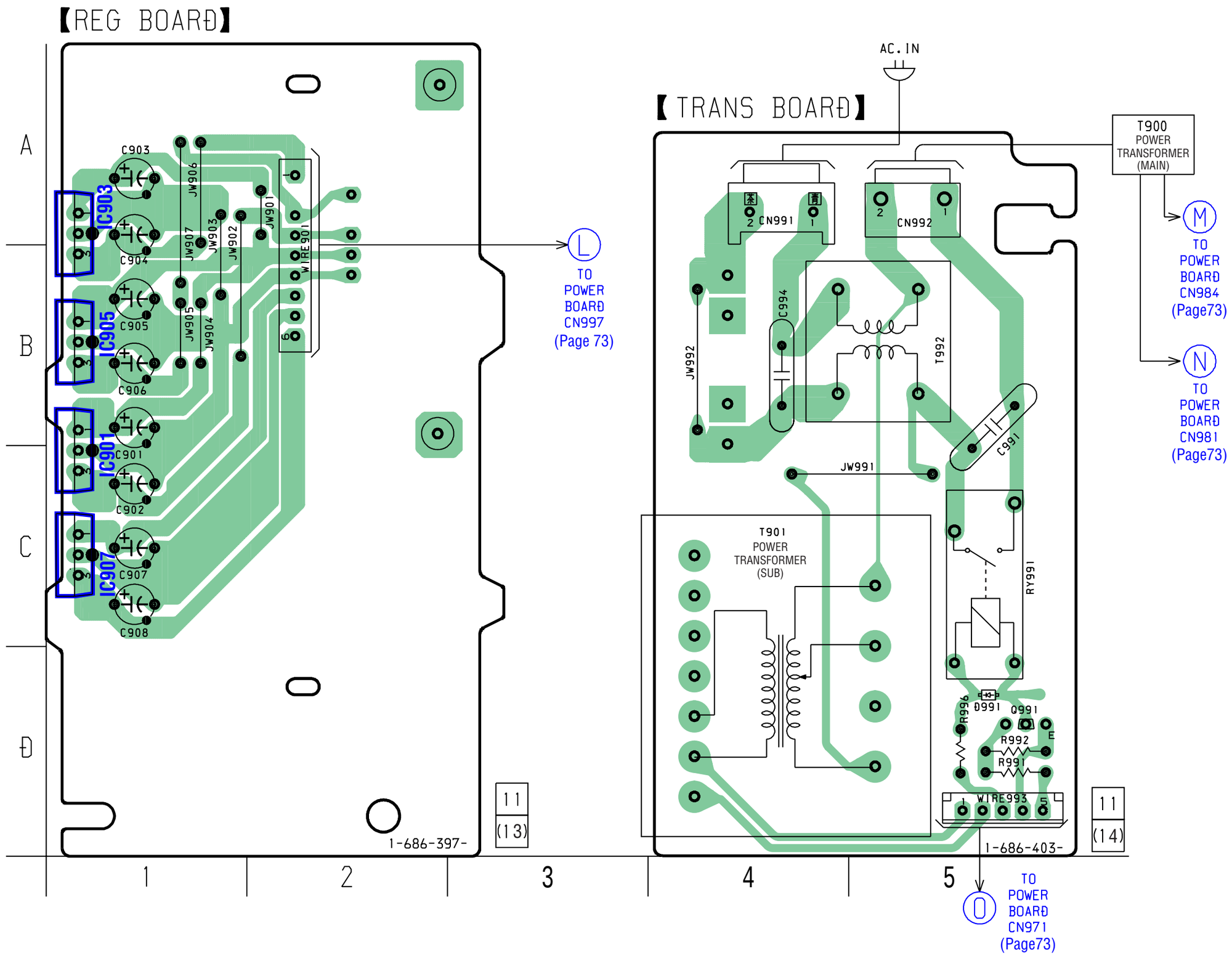

6-21. Schematic Diagram – REG Board / TRANS Board –

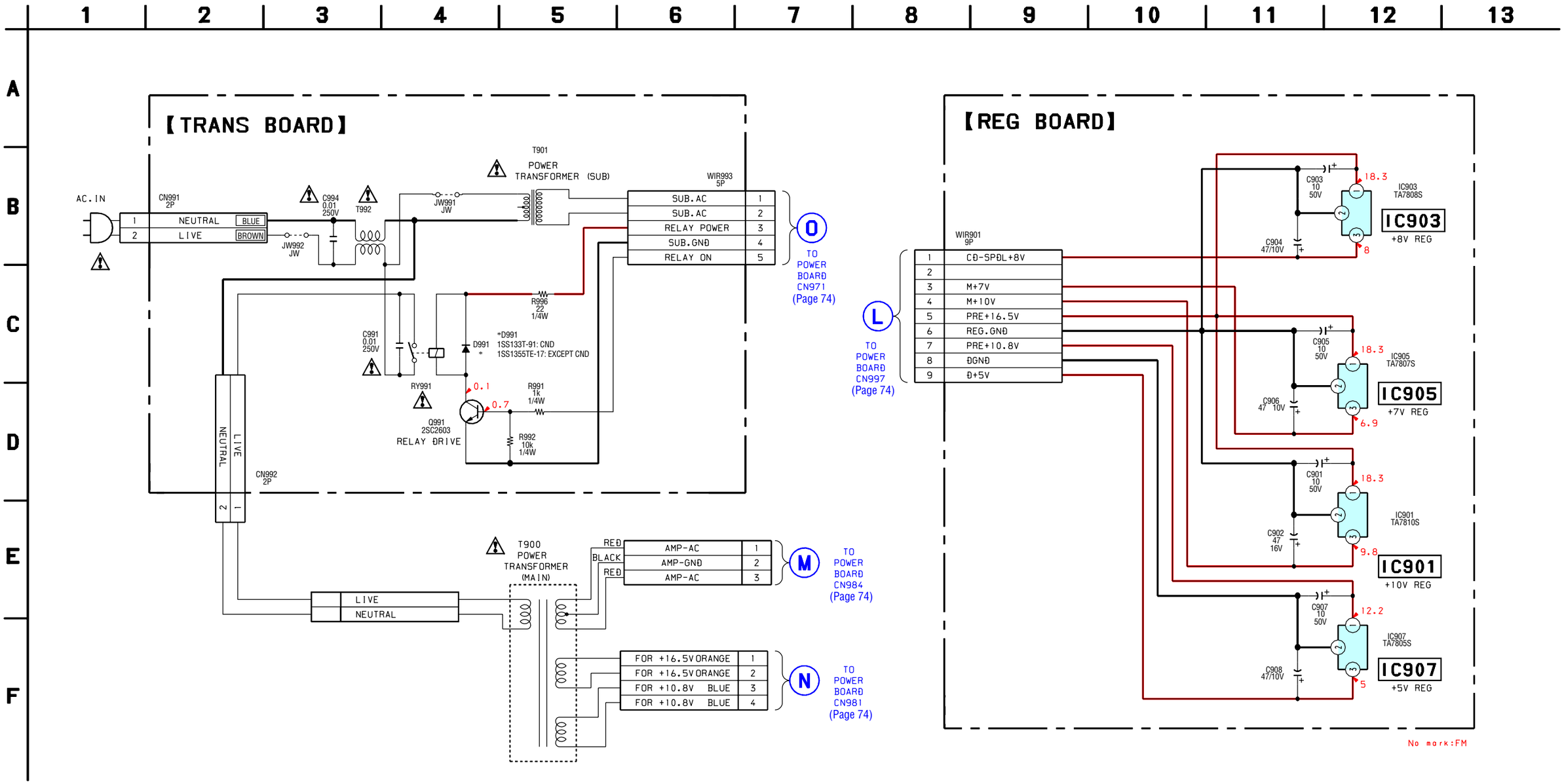

6-22. Printed Wiring Board – AMP Board –

• See page 47 for Circuit Boards Location. • **: Uses unleaded solder.**

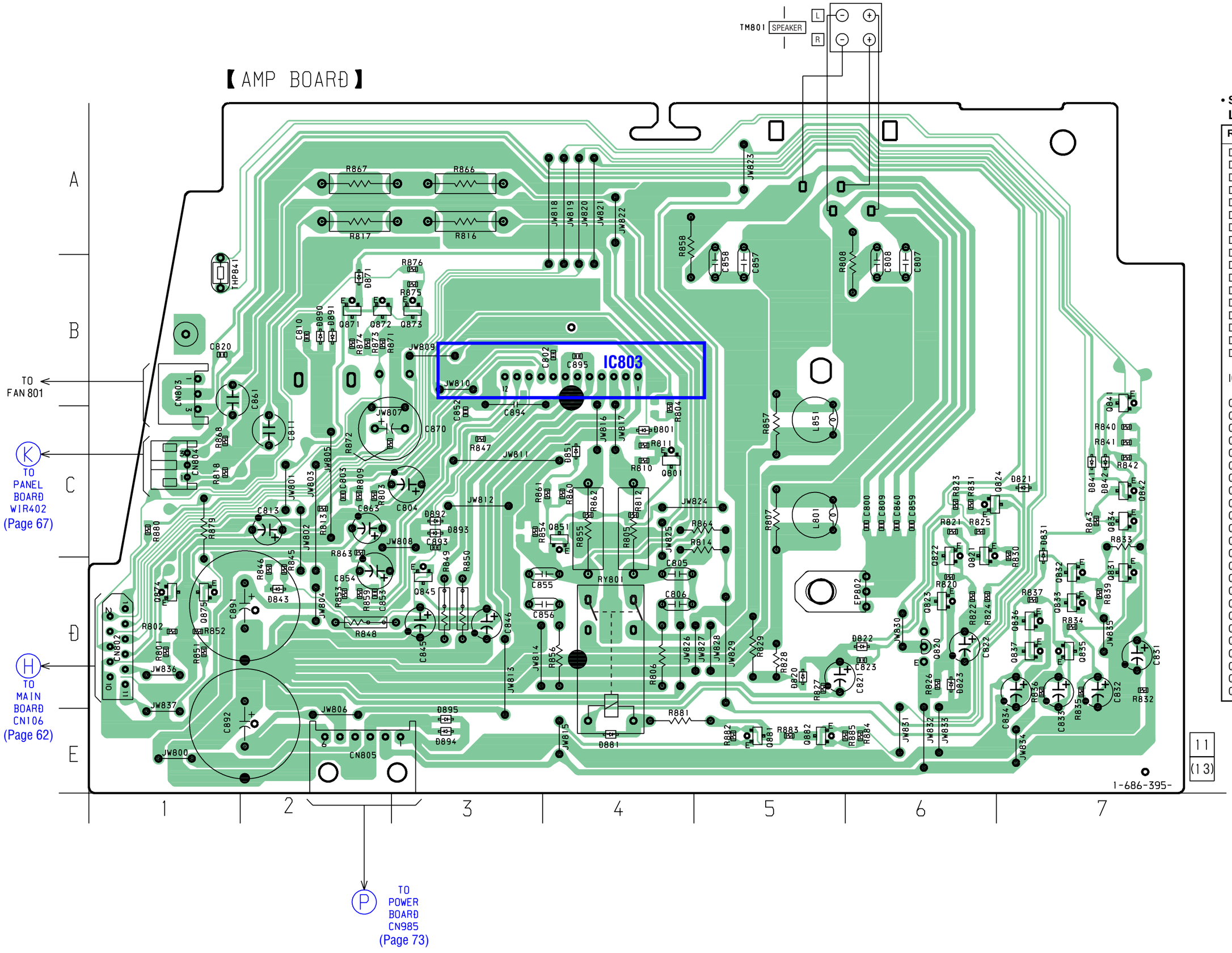

• **Semiconductor Location**

Ref. No.	Location
D801	C-4
D821	C-7
D822	D-6
D823	D-6
D831	C-7
D841	C-7
D842	C-7
D843	D-2
D851	C-4
D871	B-2
D881	E-4
D890	B-2
D891	B-2
D892	C-3
D893	C-3
D894	E-3
D895	E-3
IC803	B-4
Q801	C-4
Q820	D-6
Q821	C-6
Q822	C-6
Q823	D-6
Q824	C-7
Q831	D-7
Q832	D-7
Q833	D-7
Q834	C-7
Q835	D-7
Q836	D-7
Q837	D-7
Q841	B-7
Q842	C-7
Q845	D-3
Q851	C-4
Q871	B-2
Q872	B-2
Q873	B-3
Q874	D-1
Q875	D-1
Q881	E-5
Q882	E-5

6-23. Schematic Diagram – AMP Board –

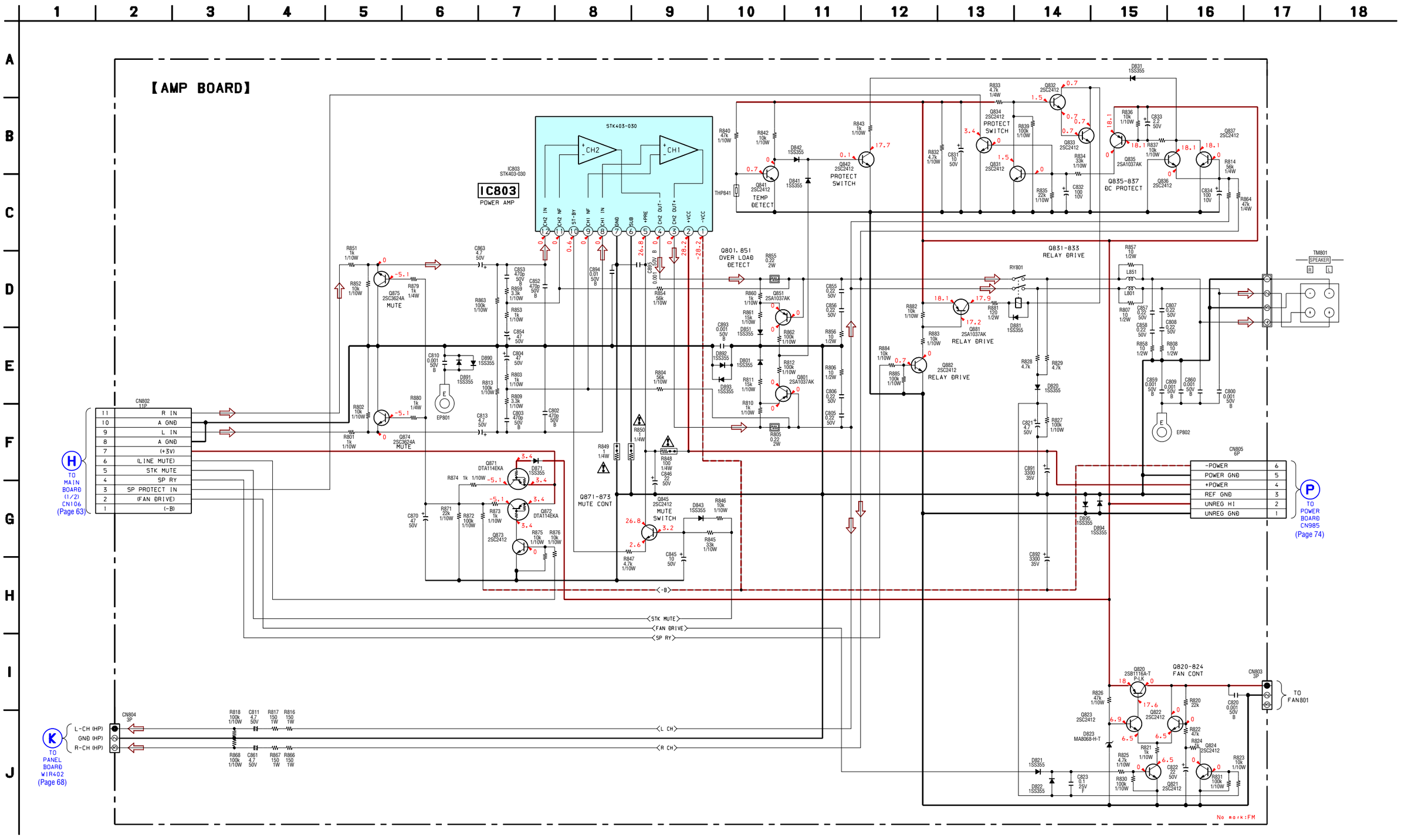

6-24. Printed Wiring Board – POWER Board – • See page 47 for Circuit Boards Location. • **: Uses unleaded solder.**

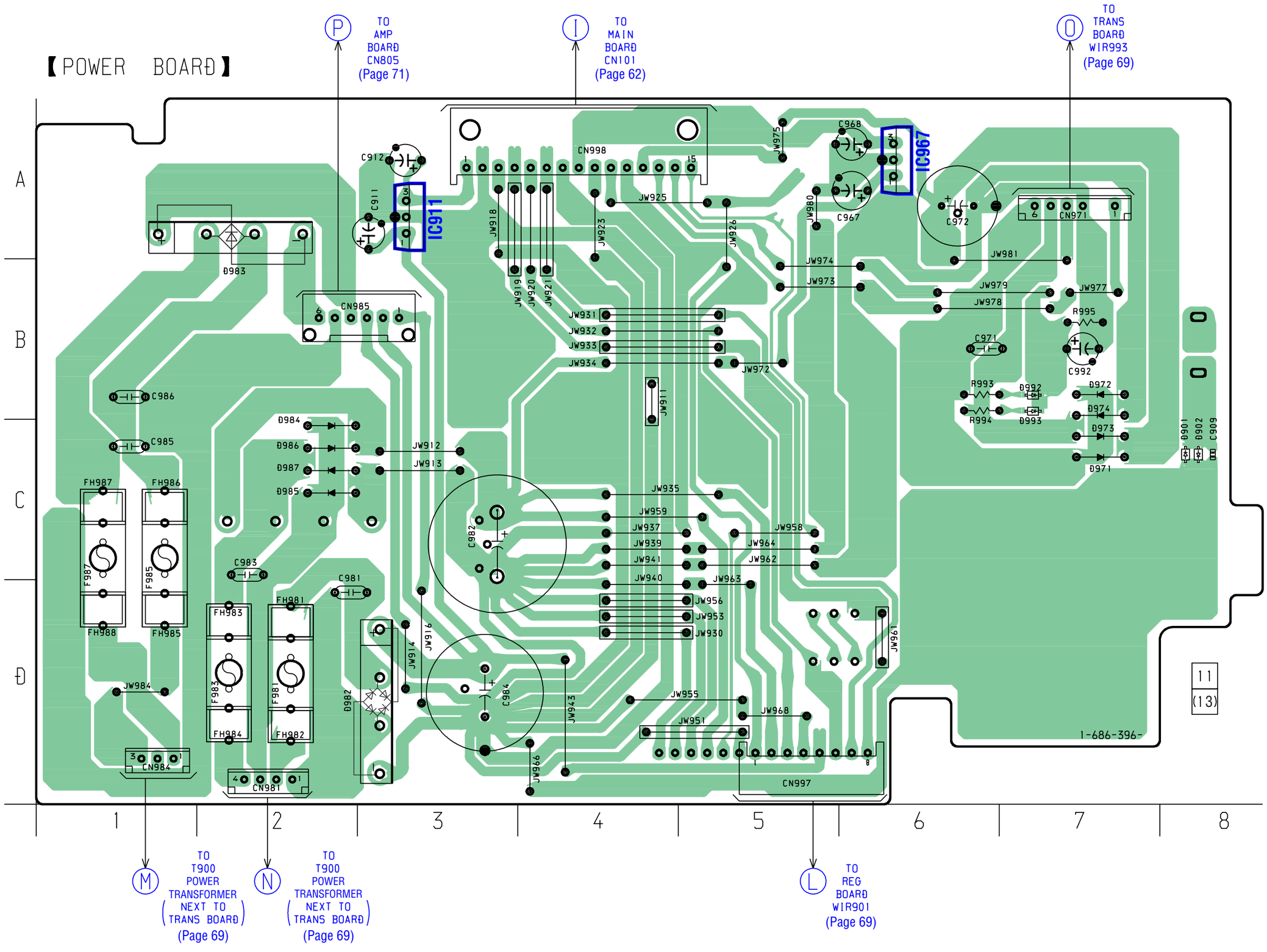

• **Semiconductor Location**

Ref. No.	Location
D901	C-8
D902	C-8
D971	C-7
D972	B-7
D973	C-7
D974	B-7
D982	D-3
D983	A-2
D984	C-2
D985	C-2
D986	C-2
D987	C-2
D992	B-7
D993	B-7
IC911	A-3
IC967	A-6

6-25. Schematic Diagram – POWER Board –

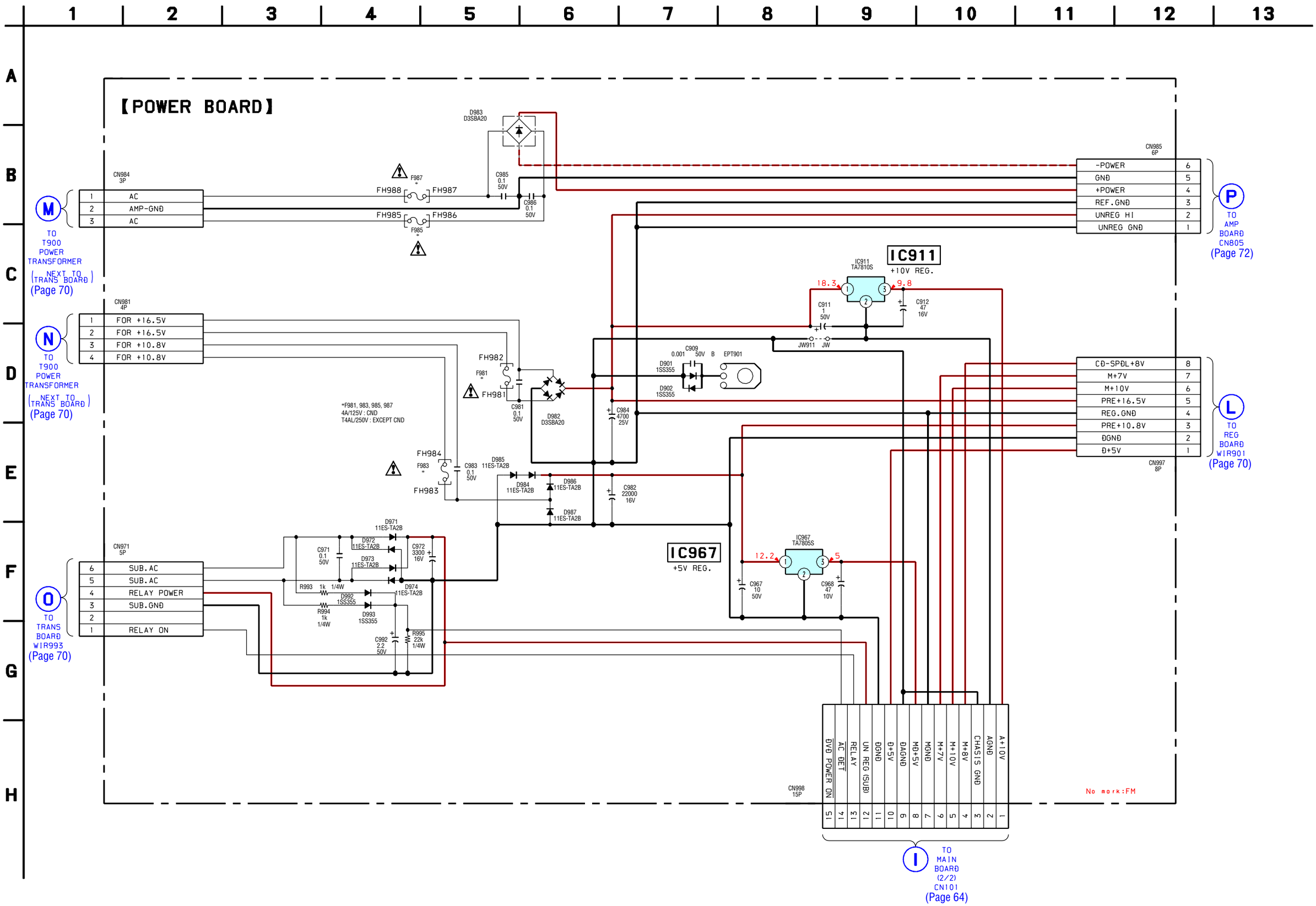

6-26. IC Block Diagrams
– BD (CD) Board –

IC101 CXD3068Q

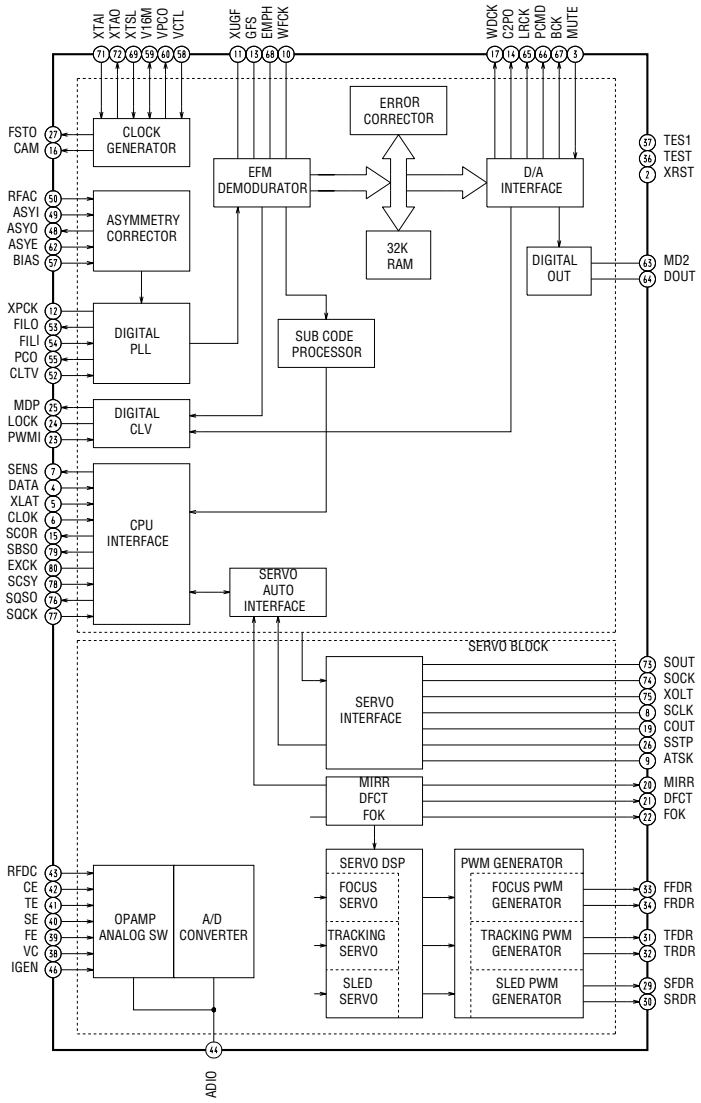

– BD (MD) Board –

IC102 AN41050

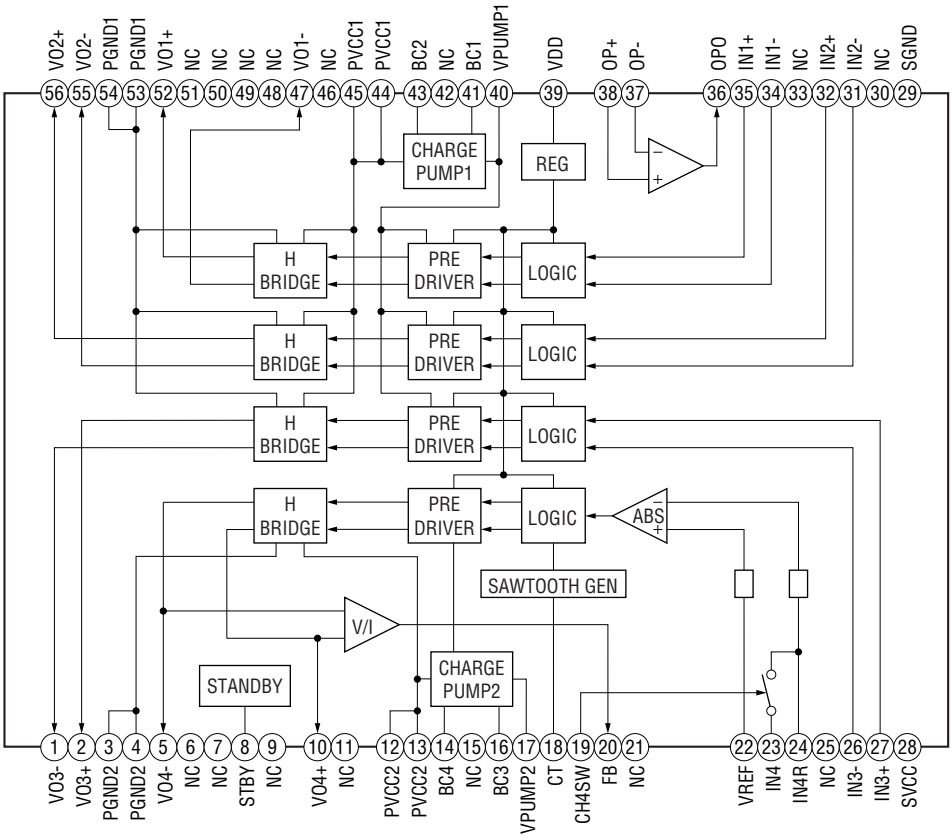

IC103 CXA2581N-T4

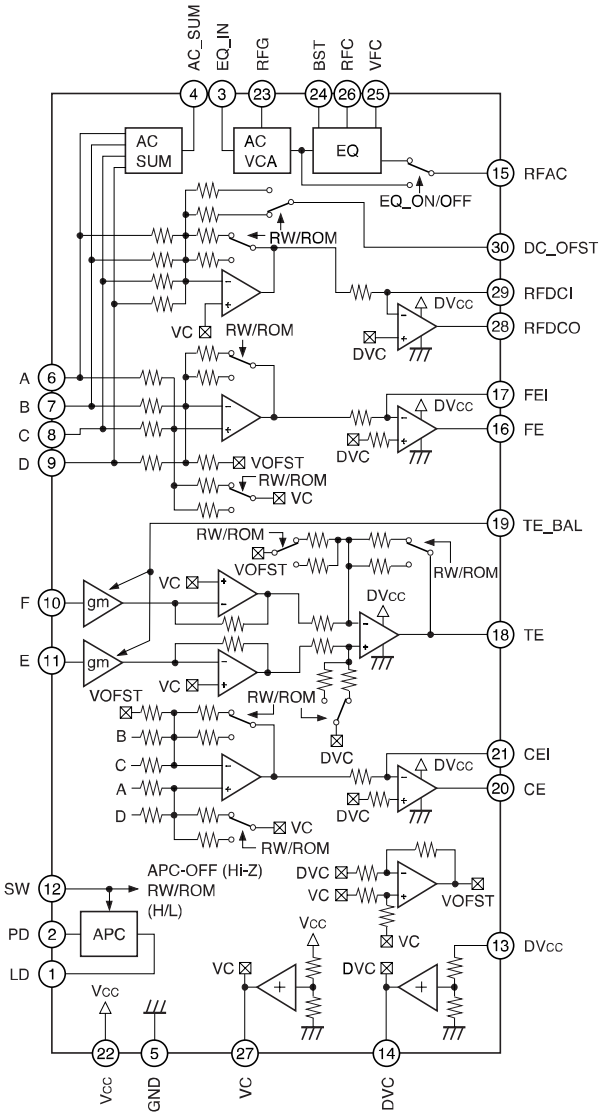

IC104 TC74HC4052AFT(EL)

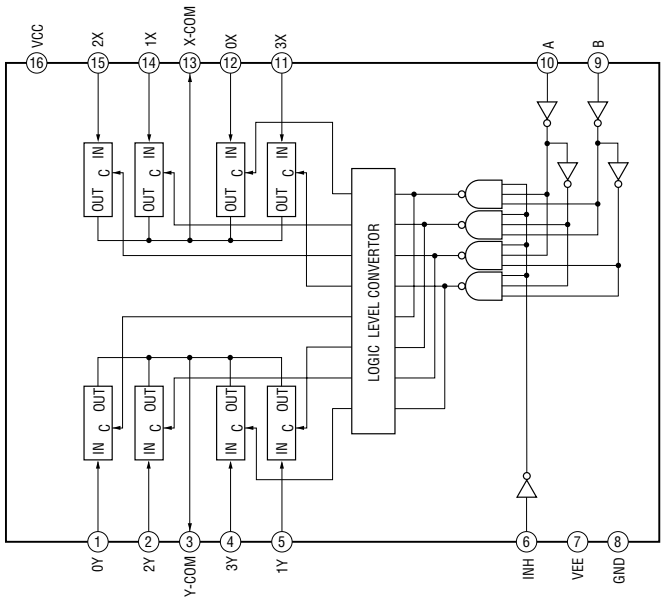

– BD (MD) Board –

IC101 CXA2523AR

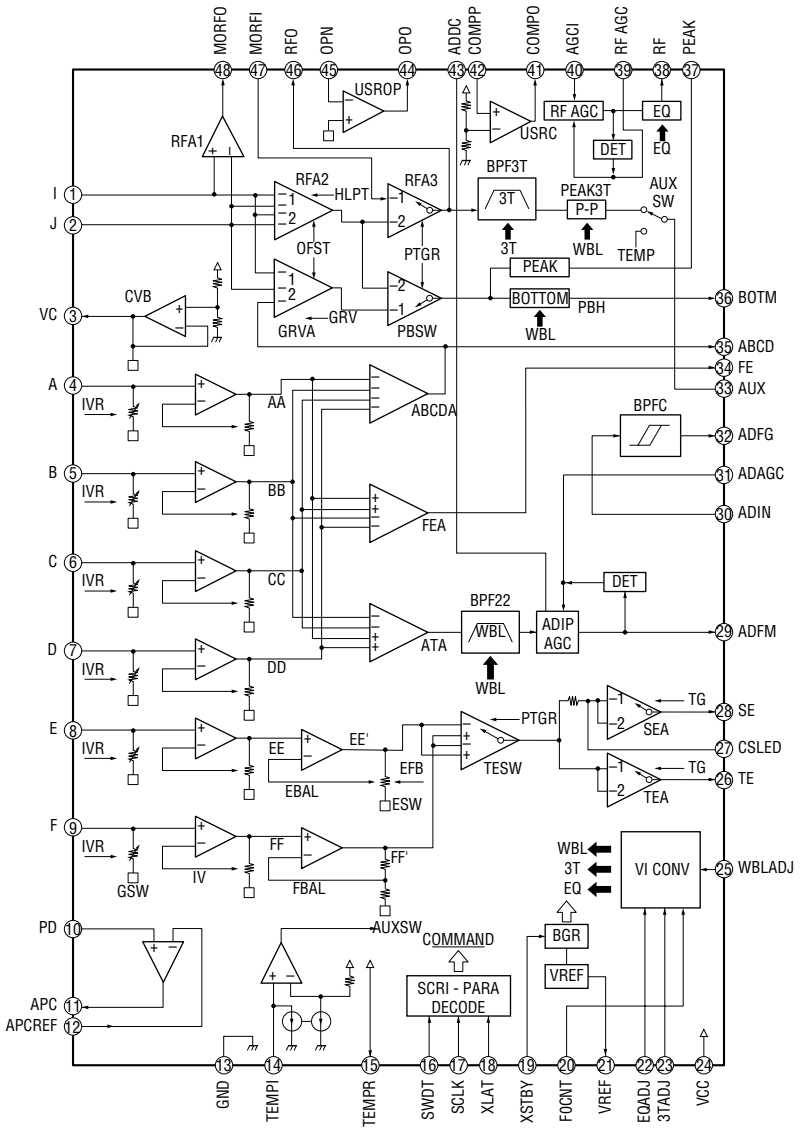

IC201 CXD2664R

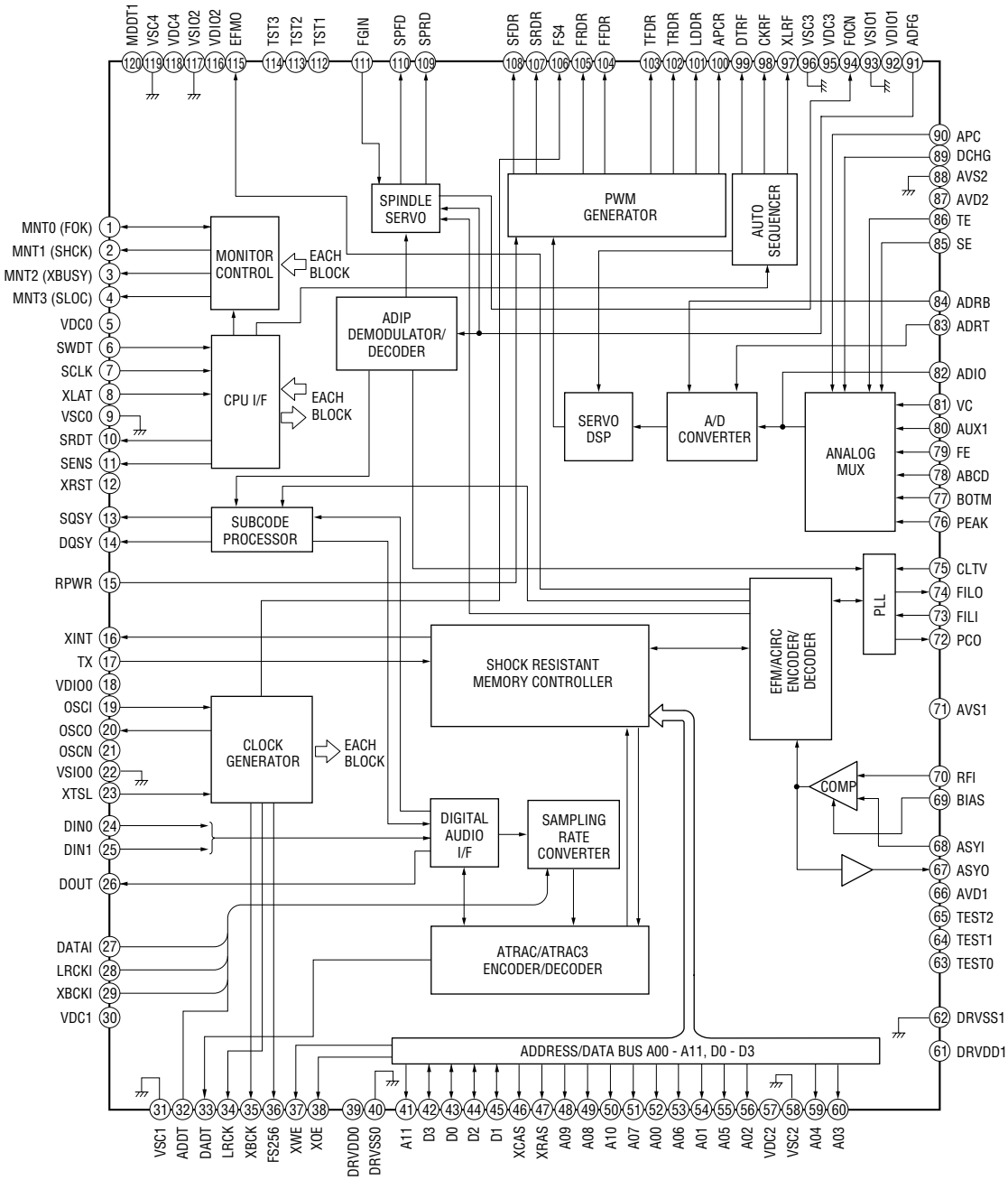

IC401 BH6519FS-E2

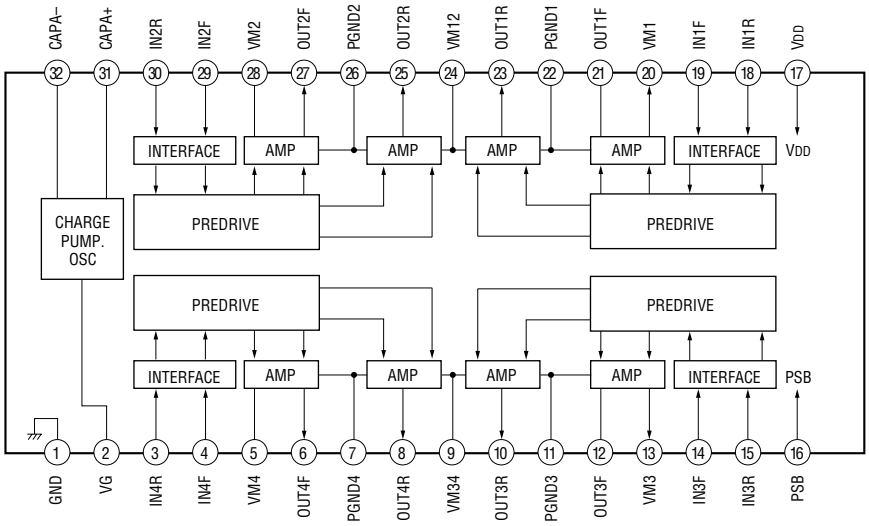

IC803 CY24115-2SCT

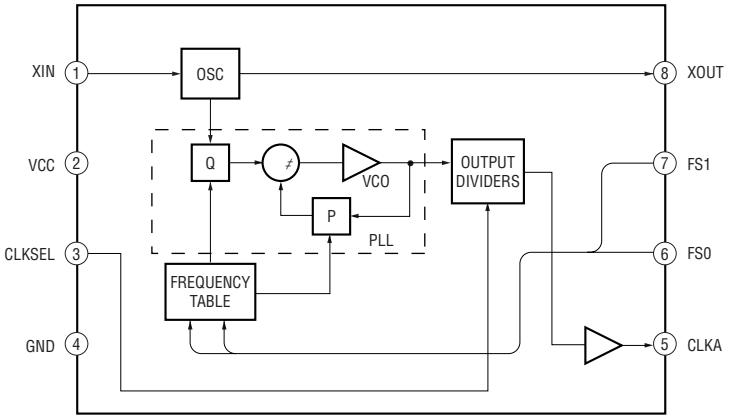

– MD DIGITAL Board –

IC701 AK4584VQ

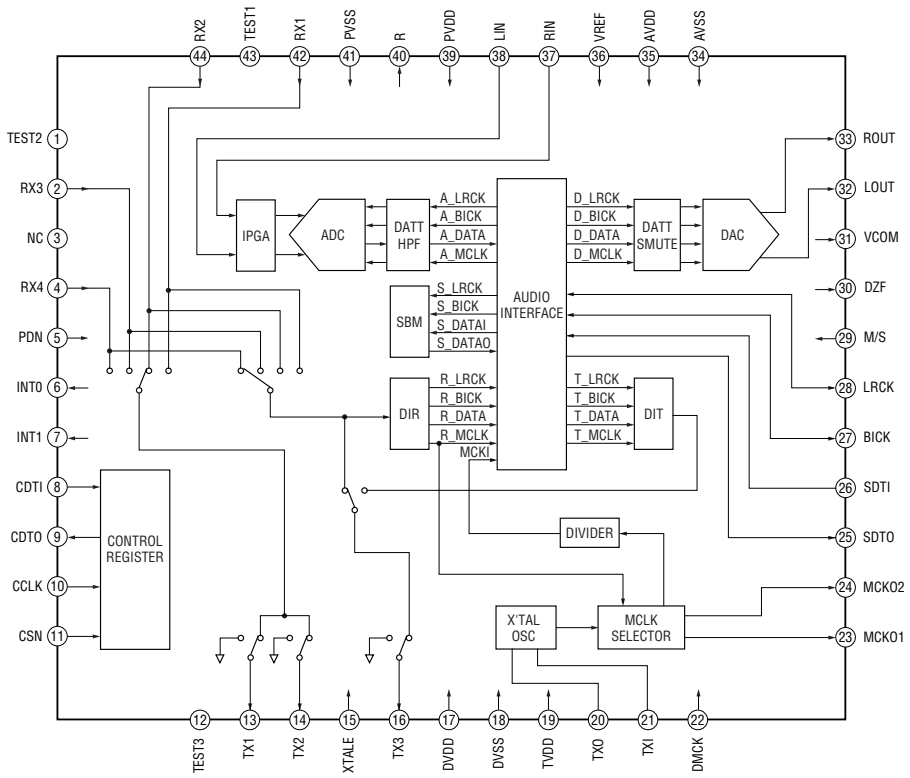

IC705 CXD1875TQ

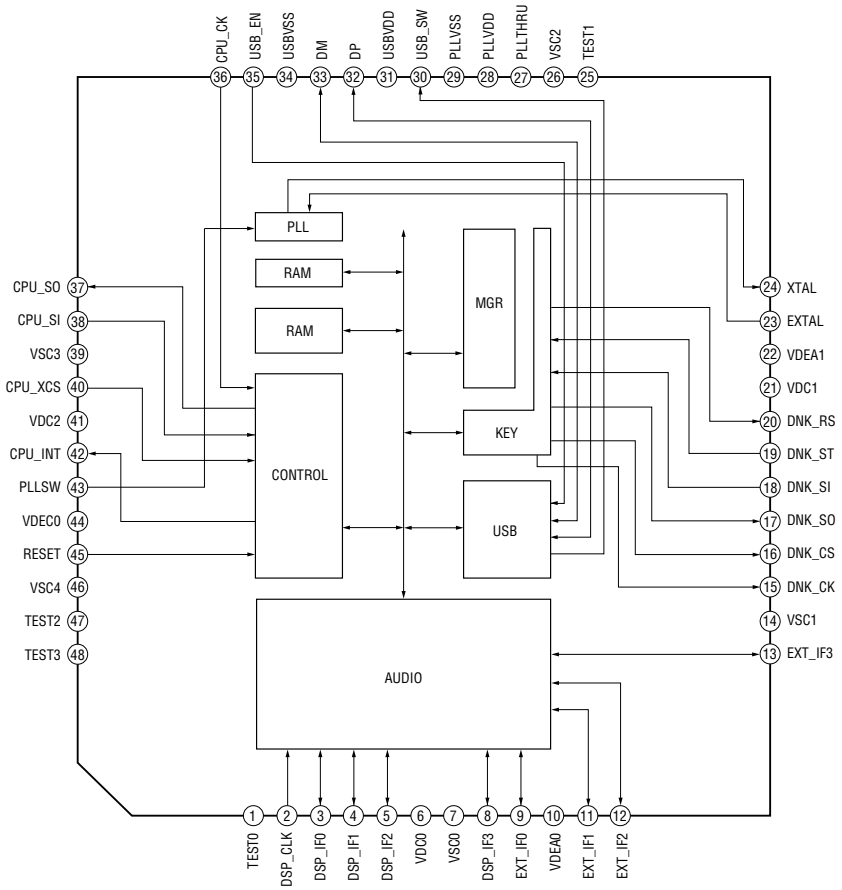

IC706 PCM2903EG/2K

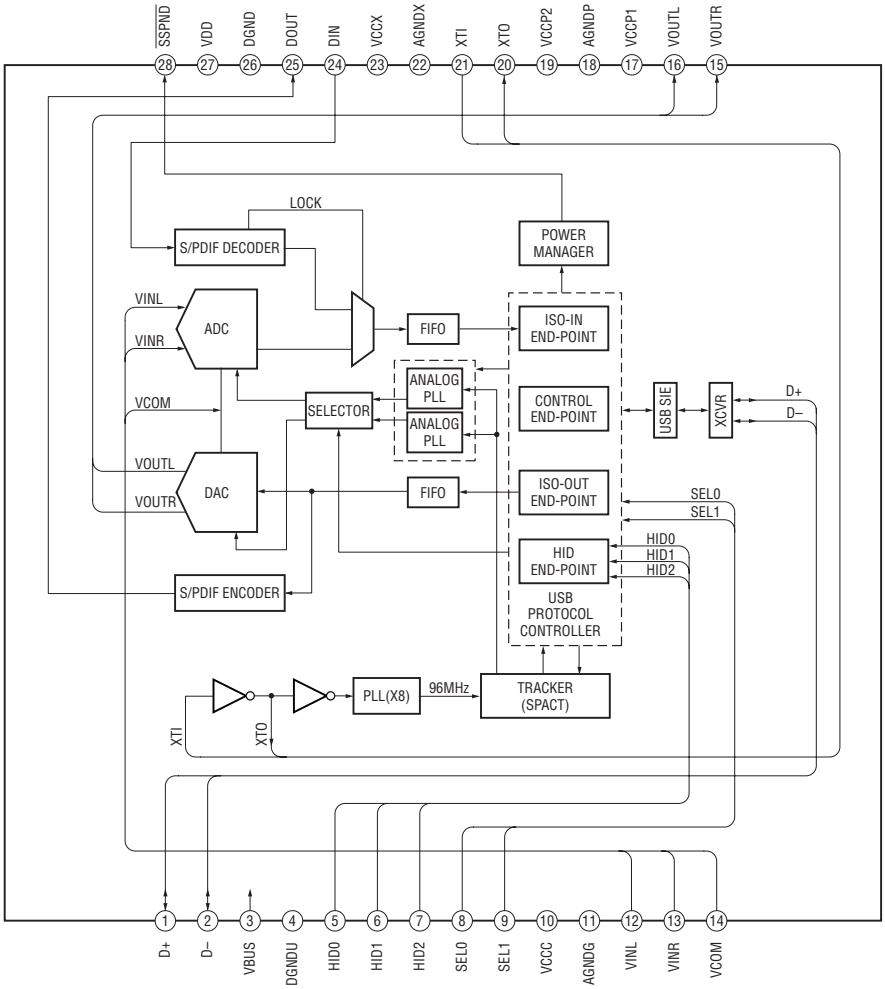

IC721 M62016FP-E1

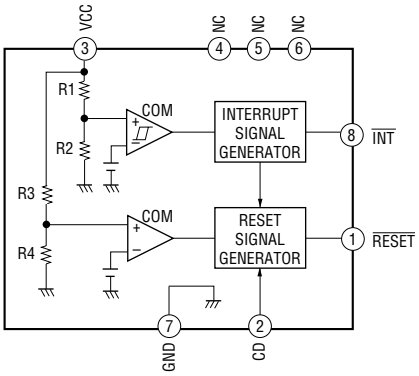

IC781 LB1830M-S-TE-L

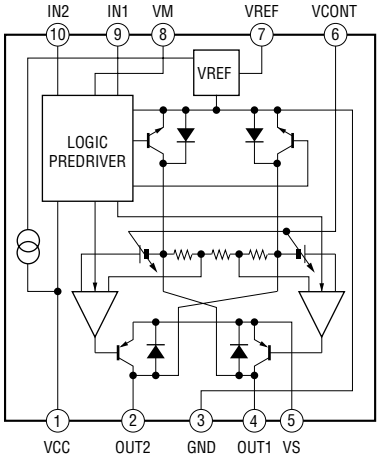

IC753 TC7WH74FU(TE12R)

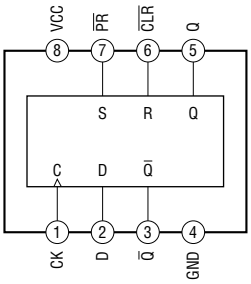

– MAIN Board –

IC102 LC75342

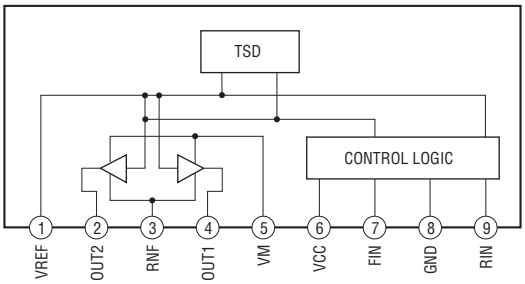

IC220 BA6956AN

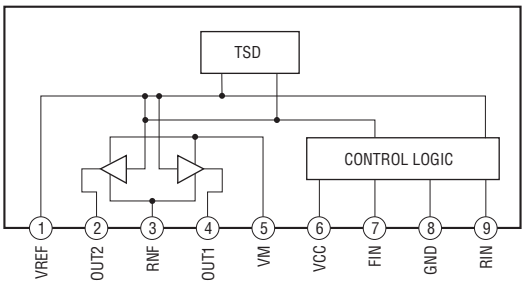

6-27. IC PIN FUNCTION DESCRIPTION

• IC101 M30622MGN-B16FP SYSTEM CONTROL (MAIN Board)

Pin No.	Pin Name	I/O	Description
1	LCD ON	O	LCD display power supply control signal output
2	ST-RDS-DATA	I	RDS data input (AEP, UK)
3	LCD-RST	O	LCD reset signal output
4	SIRCS-IN-WAKE	I	SIRCS signal input
5	LCD-DATA	O	LCD data output
6	LCD-CS	O	LCD chip select signal output
7	LCD-CLK	O	LCD clock output
8	BYTE	—	External data bus width selection signal input (connected to the ground)
9	CNVSS	—	Processor mode selection signal input (fixed at “L”)
10	XCIN	I	Sub clock input
11	XCOUT	O	Sub clock output
12	$\overline{\text{RESET}}$	I	System reset signal input
13	XOUT	O	Main system clock output
14	VSS	—	Ground terminal
15	XIN	I	Main system clock input(16MHz)
16	VCC	—	Power supply (+3.3V)
17	NMI	I	Not used (fixed at “H”)
18	ST-RDS-CLK	I	RDS clock input (AEP, UK)
19	CD-SCOR	I	CD Q-data request signal input
20	AC-CUT	I	AC cut detection signal input (“L” : AC cut, “H” : normal)
21	ST-MUTE	O	Tuner muting signal output
22	ST-CE	O	Tuner chip enable signal output
23	ST-DATA-OUT	O	Tuner data output
24	CD-PWM3	O	PWM3 signal output
25	ST-DATA-IN	I	Tuner data input
26	CD-PWM2	O	PWM2 signal output
27	ST-CLK	O	Tuner clock output
28	CD-PWM1	O	PWM1 signal output
29	IIC-CLK	I/O	IIC communication clock input/output
30	IIC-DATA	I/O	IIC communication data input/output
31	TXD1	O	Not used (open)
32	CD-SQSO	I	SQSO signal input
33	CD-SQCLK	O	Clock output for serial data reading
34	ST-STEREO	I	STEREO signal input from the tuner
35	CD-DATA	O	Serial data output
36	CD-XLT	O	Serial data latch signal output
37	CD-CLK	O	Clock output for serial data transfer
38	TC-PLAY-SW	I	TC play switch signal inpvut
39	32K-OUT	O	32kHz clock output (open)
40	TC-MUTE	O	TC line muting signal output (“H” : muting on, “L” : muting off)
41	TC-REC-MUTE	O	TC recording muting signal output (“L” : muting on, “H” : muting off)
42	TC-BIAS	O	BIAS on/off control signal output (“L” : bias on, “H” : bias off)
43	TC-PB-REC	O	TC record/playback control signal output (“L” : playback, “H” : record)
44	LED-STANDBY	O	STANDBY LED control signal output
45	AD RESETSM-INT	O	Not used (open)
46	NSP-MUTE	O	Not used (open)
47	SM-CS	O	Not used (open)
48	SM DRVRST	O	Not used (open)
49	AD CS	O	Not used (open)
50	HP-DET	I	Headphone detection signal input

Pin No.	Pin Name	I/O	Description
51	LED-LCD-BL	O	Back light control signal output
52	VOL-B	I	Volume signal input from the rotary encoder
53	VOL-A	I	Volume signal input from the rotary encoder
54	CD-LDON	O	LDON signal output to the RF amplifier (IC103)
55	CD-1-4	O	Spindle speed selection signal output
56	CD-SENS	I	SENS signal input
57	ST-TUNED	I	Tuning signal input from the tuner (“L” : on, “H” : off)
58	TC-TRIG-B	O	Solenoid control signal output (“H” : on, “L” : off)
59	TC-CAPM-CONT	O	Capstan motor control signal output (“H” : REV, “H” : FWD, “L” : STOP)
60	CD-XRST	O	CD reset siganl output
61	CD-1-2	O	Clock selection signal output
62	VCC	—	Power supply terminal
63	SOFT-TEST	O	soft test signal output
64	VSS	—	ground terminal
65	CD-BD-PWR	O	CD power supply control signal output
66	SP-RELAY	O	Speaker relay control signal output
67	CD-LOAD-OUT	O	Loading motor control signal output
68	CD-LOAD-IN	O	Loading motor control signal output
69	CD-OUTSW	I	Switch signal input from the switch (S1) on the LOADING board
70	CD-INSW	I	Switch signal input from the switch (S1) on the LOADING board
71	BASS-A	I	BASS signal input from the rotary encoder (not used)
72	BASS-B	I	BASS signal input from the rotary encoder (not used)
73	USB CHECK	I	Not used (connected to the ground)
74	KEY-WAKE-UP	I	Key input detection signal input
75	PCLK-PWR	I	Power request signal input frm PC LINK (not used)
76	TREBLE-A	I	TREBLE signal input from the rotary encoder (not used)
77	TREBLE-B	I	TREBLE signal input from the rotary encoder (not used)
78	PDOWN-OUT	O	MD power supply control signal output
79	LED-PANEL	O	PANEL LED control signal output
80	TC-ALC	O	ALC signal output (“L” : on, “H” : off)
81	LINE-MUTE	O	Audio muting signal output (“H” : on, “L” : off)
82	PWR-RELAY	O	Main relay control siganl output
83	FAN_DRIVE	O	Fan control signal output
84	AMP-PWR	O	Not used (open)
85	HP-MUTE	O	Not used
86	EQ-CE	O	Chip enable signal output to the volume control IC
87	EQ-DATA	O	Data output to the volume control IC
88	EQ-CLK	O	Clock output to the volume control IC
89	TA-MUTE	O	Muting control signal output to the power amplifier
90	TC-END-SW	I	TC_END switch signal input
91	TC-HALF-REC-SW	I	TC_SW(PACK, REC-L, REC-R) siganal input
92	MODEL	I	Model selection terminal
93	SHIMUKE	I	Spec selection terminal
94, 95	KEY3, KEY2	I	Function key signal input
96	ADGND	—	Ground terminal (analog)
97	KEY1	I	Function key signal input
98	VREF	—	Reference voltage terminal
99	AVCC	—	Power supply terminal (analog)
100	PROTECT-IN	I	Voltage detection signal input for power amplifier protection

• IC702 M30823MH-A07GP MASTER CONTROLLER (MD DIGITAL Board)

Pin No.	Pin Name	I/O	Description
1	A-IN	—	Not used (open)
2	RMC/LEVEL-R	—	Not used (open)
3	NETMD-SO	O	Serial communication data output to the USB Net MD IC (IC705)
4	NETMD-SI	I	Serial communication data input from the USB Net MD IC (IC705)
5	NETMD-CLK	O	Serial clock output to the USB Net MD IC (IC705)
6	BYTE	I	Data bus selection signal input (connected to the ground)
7	CNVSS	I	Processor mode selection terminal (connected to the ground)
8	XCIN	I	Sub clock input (32.768kHz)
9	XCOUT	O	Sub clock output (32.768kHz)
10	S.RST	I	System reset signal input
11	X OUT	O	Main clock output (10MHz)
12	VSS	—	Ground terminal
13	X IN	I	Main clock input (10MHz)
14	VCC	—	Power supply terminal
15	NMI	I	Fixed at “H” (pull-up)
16	DQSY	I	Digital in synchronous signal input (recording system)
17	P.DOWN	I	Power down detection signal input (“L” : power down)
18	SQSY	I	SUBQ(pit)/ADIP(MO) sync signal input from the DSP (IC201)
19	NC	—	Not used (open)
20	NC	—	Not used (open)
21	NC	—	Not used (open)
22	NC	—	Not used (open)
23	X INT	I	Interrupt request signal input from the DSP (IC201)
24	NC	—	Not used (open)
25	NC	—	Not used (open)
26	NC	—	Not used (open)
27	I2CCLK	I/O	I2C serial clock input/output
28	I2CDATA	I/O	I2C serial data input/output
29	SWDT	O	Serial data output to the DSP (IC201)
30	SRDT	I	Serial data input from the DSP (IC201)
31	SCLK	O	Serial data clock output to the DSP (IC201)
32	KB.CTRL	—	Not used (open)
33	L3DATAO	O	Serial data output to the ADC/DAC (IC701)
34	L3DATAI	I	Serial data input from the ADC/DAC (IC701)
35	L3CLK	O	Serial data clock output to the ADC/DAC (IC701)
36	L3MODE	O	Chip select signal output to the ADC/DAC (IC701)
37	ADA.RST	—	Not used (open)
38	ADA.LAT	—	Not used (open)
39	EPM	O	Not used (fixed at “L”)
40	NC	—	Not used (open)
41	NC	—	Not used (open)
42	MOD	O	Modulation signal output to the laser diode (“L” : off, “H” : on)
43	LDON	O	Laser on/off signal output (“H” : laser on)
44	CE	I	Not used (fixed at “H”)
45	LIMIT-IN	I	Limit switch signal input (“L” : SLED limit in, “H” : SLED limit out)
46	WRPWR	O	Write power on/off signal output (“L” : off, “H” : on)
47	REC-SW	I	Detection signal input from the loading position switch (REC SW)
48	D.RST	O	Digital reset signal output to the DSP (IC201) and the motor driver (IC401)
49	SENS	I	SENS signal input from the DSP (IC201)
50	PLAY-SW	I	Detection signal input from the loading position switch (PLAY SW)

Pin No.	Pin Name	I/O	Description
51	XLAT	O	Latch signal output to the DSP (IC201)
52	SCL	O	Serial communication clock output to the EEPROM
53	OUT-SW	I	Detection signal inut from the loading position switch (OUT SW)
54	MNT2	I	Busy monitor signal input from the mechanism deck
55	MNT1	I	Track jump detection signal input from the mechanism deck
56	EEP-WP	O	Write protect signal output to the EEPROM (“L” : enable to write)
57	SDA	I/O	Serial communication data input/output with the EEPROM
58	REFLECT	I	Detection signal input from the reflect detection switch (“H” : low reflection)
59	PROTECT	I	Protection claw detection signal input from the recording protection detection switch (“H” : protection)
60	VCC	—	Power supply terminal
61	NC	—	Not used (open)
62	VSS	—	Ground terminal
63	LOAD-LO	O	Voltage control signal output to the loading motor (“L” : high voltage, “H” : low voltage)
64	LOAD-OUT	O	Loading motor control signal output (“H” : out)
65	LOAD-IN	O	Loading motor control signal output (“H” : in)
66	NC	—	Not used (open)
67	NC	—	Not used (open)
68	SEL0	I	Destination input terminal
69	SEL1	I	Destination input terminal
70	NC	—	Not used (open)
71	NC	—	Not used (open)
72	NC	—	Not used (open)
73	NETMD-INT	I	Interrupt request signal input from the USB Net MD IC (IC705) (“L” : interrupt request on)
74	NETMD-CS	O	Chip select signal output to the USB Net MD IC (IC705)
75	NETMD-RST	O	Reset signal output to the USB Net MD IC (IC705)(“L” : reset)
76	NETMD-PLLSW	O	PLL function on/off control signal output to the USB Net MD IC (IC705)(“L” : PLL function on)
77	VBUS	I	USB VBUS detection signal input (“H” : USB on)
78	NC	—	Not used (open)
79	LOCK	I	Digital in lock detection signal input from the ADC/DAC (IC701)
80	NC	—	Not used (open)
81	ADSEL-2	O	Not used (open)
82	ADSEL-1	O	Not used (open)
83	ADSEL-0	O	Not used (open)
84	OPTSEL	O	Not used (open)
85	DACMUTE	—	Not used (open)
86	DARESET	O	Reset signal output to the ADC/DAC (IC701) (“L” : active)
87	IOP	I	Iop measurement input terminal
88	NC	—	Not used (open)
89	NC	—	Not used (open)
90	EMPHASIS	I	Emphasis signal input from the ADC/DAC (IC701)
91	TP2	—	Not used (open)
92	TP1	—	Not used (open)
93	TP_UNLOCK	—	Not used (open)
94	AVSS	—	Ground terminal (analog)
95	KEY0	—	Not used (open)
96	VREF	I	Reference voltage input terminal
97	AVCC	—	Power supply terminal (analog)
98	NC	—	Not used (open)
99	FLDATA	—	Not used (open)
100	FLCK	—	Not used (open)

• **IC703 MB89595CPFV-G-127-BND USB I/F (MD DIGITAL Board)**

Pin No.	Pin Name	I/O	Description
1	UCK	I	Clock input from the USB I2C converter (IC704)
2	TX	O	Serial data output to the USB I2C converter (IC704)
3	RX	I	Serial data input from the USB I2C converter (IC704)
4	SLEEP	O	SLEEP signal output
5 to 11	NC	—	Not used (open)
12	P.DOWN	I	Power supply status signal input
13	REQ	O	Interrupt signal output to the USB I2C converter (IC704)
14	VSS	—	Ground terminal (USB)
15	BUSY	O	Process status signal output to the USB I2C converter (IC704)
16	EXT-ON	—	Not used (open)
17, 18	NC	—	Not used (open)
19	RST	I	Reset signal input
20, 21	MDB0, MDB1	I	Operation mode setting terminal
22	X0	I	Crystal resonator terminal (6MHz)
23	X1	O	Crystal resonator terminal (6MHz)
24	VSS	—	Ground terminal (USB)
25 to 30	NC	—	Not used (open)
31	USOVB	O	VBUS check signal output
32	PULLUPSW	—	USB D+ pull up output
33 to 43	NC	—	Not used (open)
44	$\overline{\text{VBUSDET}}$	I	VBUS detection signal input
45	ZERO	—	Not used (connected to the ground)
46	XSSPND	—	Not used (connected to the ground)
47	XPLYBCK	—	Not used (connected to the ground)
48	BUS/SELF	—	Not used (connected to the ground)
49	VCC	—	Power supply terminal
50	C	—	Not used (fixed at “H”)
51	RPVP	I/O	USB route port (+ terminal)
52	RPVM	I/O	USB route port (- terminal)
53	D1VP	O	USB down port 1 (+ terminal)
54	D1VM	O	USB down port 1 (- terminal)
55	D2VP	O	USB down port 2 (+ terminal)
56	D2VM	O	USB down port 2 (- terminal)
57	D3VP	—	Not used (connected to the ground)
58	D3VM	—	Not used (connected to the ground)
59	D4VP	—	Not used (connected to the ground)
60	D4VM	—	Not used (connected to the ground)
61 to 64	NC	—	Not used (open)

• **IC704 MB89537ACPFM-G-405-BND USB-I2C CONVERTER (MD DIGITAL Board)**

Pin No.	Pin Name	I/O	Description
1 to 10	NC	—	Not used (open)
11	AVCC	—	Power supply terminal (A/D converter)
12	AVR	—	Reference voltage terminal (A/D converter)
13	AVSS	—	Ground terminal (A/D converter)
14	REQ	I	Transfer request signal input from the USB I/F (IC703)
15	P.DOWN	I	System power down detection signal input
16	BUSY	I	BUSY signal input from the USB I/F (IC703)
17	SLEEP	I	SLEEP signal input from the USB I/F (IC703)
18	NC	—	Not used (open)
19	XRST	I	Reset signal input
20, 21	MOD0, MOD1	I	Mode setting terminal (connected to the ground)
22	X0	I	Main clock input (10MHz)
23	X1	O	Main clock output (10MHz)
24	VSS	—	Ground terminal
25 to 47	NC	—	Not used (open)
48	I2CBUSY	I	I2C BUSY signal input (fixed at “H”)
49	NC	—	Not used (open)
50	C	—	Capacitor connection terminal
51	CLK	O	Serial clock output to the USB I/F (IC703)
52	TX	O	Serial data output to the USB I/F (IC703)
53	RX	I	Serial data input from the USB I/F (IC703)
54, 55	NC	—	Not used (open)
56	VCC	—	Power supply terminal
57 to 60	NC	—	Not used (open)
61	IC2DATA	I/O	I2C communication data input/output
62	I2CCLK	I/O	I2C communication clock input/output
63, 64	NC	—	Not used (open)

SECTION 7
EXPLODED VIEWS

NOTE:
- -XX, -X mean standardized parts, so they may have some differences from the original one.
- Items marked "*" are not stocked since they are seldom required for routine service. Some delay should be anticipated when ordering these items.
- The mechanical parts with no reference number in the exploded views are not supplied.
- Color Indication of Appearance Parts
  Example:
  KNOB, BALANCE (WHITE) . . . (RED)
  ↑ Parts Color ↑ Cabinet's Color

- Abbreviation
  AUS : Australian model
  CH : Chinese model
  CND : Canadian model
  HK : Hong Kong model
  KR : KOREAN

The components identified by mark ⚠ or dotted line with mark ⚠ are critical for safety. Replace only with part number specified.

Les composants identifiés par une marque ⚠ sont critiques pour la sécurité. Ne les remplacer que par une pièce portant le numéro spécifié.

7-1. Overall Section

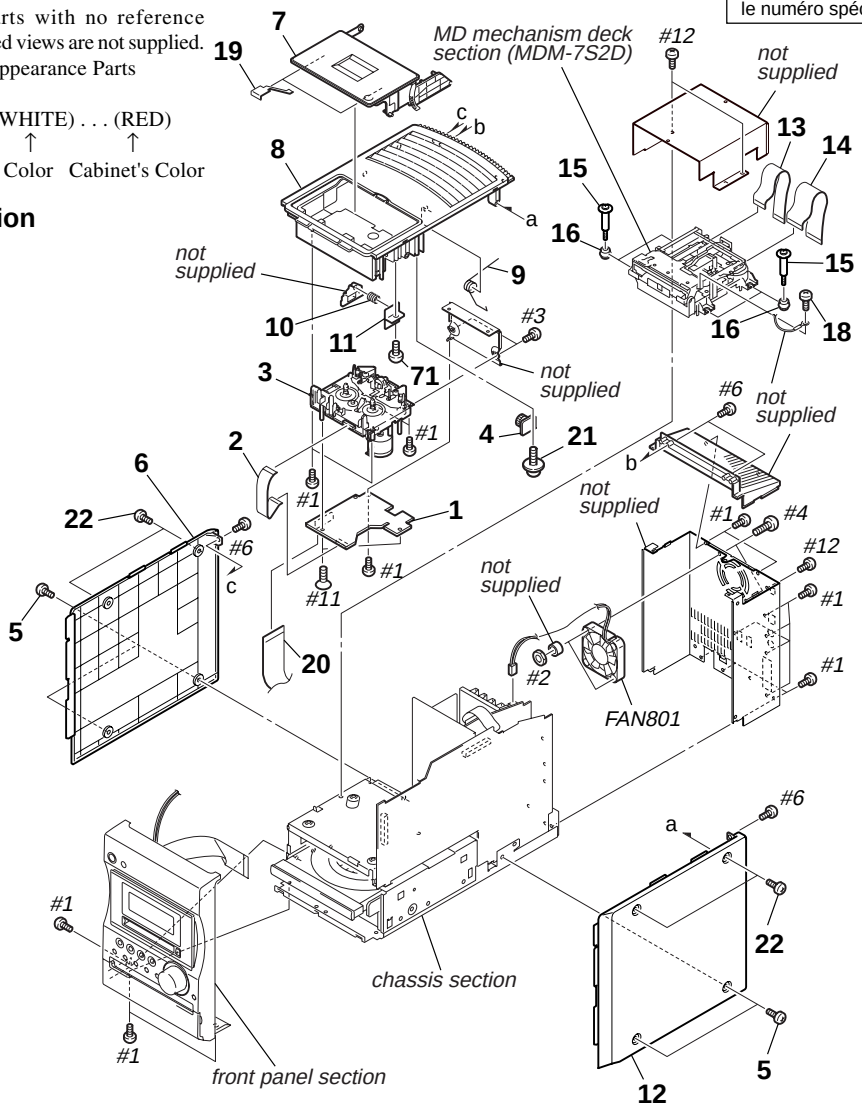

Ref. No.	Part No.	Description	Remarks
1	A-4730-687-A	TC BOARD, COMPLETE	
2	1-824-192-11	WIRE (FLAT TYPE)(8 CORE)	
3	1-796-456-31	DECK, MECHANICAL	
4	4-224-104-41	DAMPER	
5	3-363-099-01	SCREW (CASE 3 TP2)(EXCEPT HK,KR)	
5	4-235-097-11	SCREW (CASE 3 TP2)(HK,KR)	
6	4-243-194-01	CASE (L)(WHITE)(HK)	
6	4-243-194-11	CASE (L)(SILVER)(HK,KR)	
6	4-243-194-21	CASE (L)(EXCEPT HK,KR)	
7	X-4955-099-2	LID (TC) ASSY/W (WHITE)(HK)	
7	X-4955-102-2	LID (TC) ASSY/S (SILVER)(HK,KR)	
7	X-4955-105-4	LID (TC) ASSY/NT (EXCEPT HK,KR)	
8	4-243-212-02	CASE (T)(WHITE)(HK)	
8	4-243-212-12	CASE (T)(SILVER)(HK,KR)	
8	4-243-212-22	CASE (T)(EXCEPT HK,KR)	
9	4-243-217-01	SPRING (TC), TORSION	
10	4-224-117-11	SPRING (PUSH),COMPRESSION	
11	4-224-116-01	BRACKET (PUSH)	
12	4-243-195-01	CASE (R)(WHITE)(HK)	
12	4-243-195-11	CASE (R)(SILVER)(HK,KR)	

Ref. No.	Part No.	Description	Remarks
12	4-243-195-21	CASE (R)(EXCEPT HK,KR)	
13	1-792-830-11	WIRE (FLAT TYPE)(17 CORE)	
14	1-792-829-11	WIRE (FLAT TYPE)(27 CORE)	
15	4-228-643-01	SCREW (+BVTTWH M3), STEP	
16	4-231-555-01	INSULATOR	
18	4-231-113-01	SCREW (1.7X3), BTN	
19	4-243-219-01	SPRING (TC), LEAF	
20	1-773-121-11	WIRE (FLAT TYPE)(19 CORE)	
21	4-933-134-11	SCREW (+PTPWH M2.6X8)	
22	3-363-099-41	SCREW (CASE 3 TP2)(EXCEPT HK,KR)	
22	4-235-097-21	SCREW (CASE 3 TP2)(HK,KR)	
71	4-951-620-01	SCREW (2.6X8), +BVTP	
FAN801	1-787-021-11	FAN, D.C.	
#1	7-685-646-79	SCREW +BVTP 3X8 TYPE2 IT-3	
#2	7-684-024-04	N 4, TYPE 2	
#3	7-685-861-01	SCREW +BVTT 2.6X5 (S)	
#4	7-682-564-09	SCREW +B 4X14	
#6	7-685-647-79	SCREW +BVTP 3X10 TYPE2 TT(B)	
#11	7-685-205-11	SCREW +KTP 2X8 TYPE2 NON-SLIT	
#12	7-685-871-01	SCREW +BVTT 3X6 (S)	

7-2. Front Panel Section

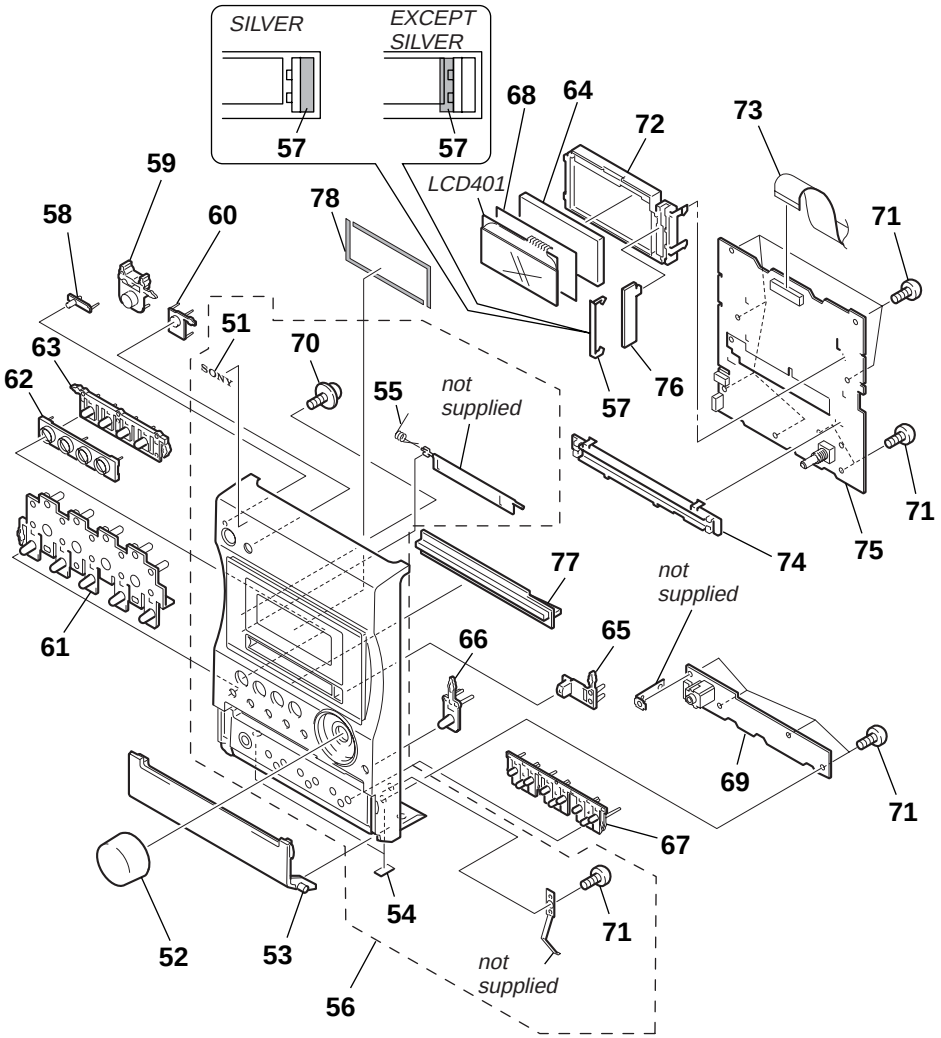

Ref. No.	Part No.	Description	Remarks
51	4-925-161-81	EMBLEM (4-A), SONY (EXCEPT HK,KR)	
51	4-925-161-91	EMBLEM (4-A), SONY (HK,KR)	
52	4-246-117-01	KNOB SPIN (VOL)	
53	4-243-197-03	LID (REC)(WHITE)(HK)	
53	4-243-197-13	LID (REC)(SILVER)(HK,KR)	
53	4-243-197-23	LID (REC)(BLUE)(CND,CH,AUS)	
53	4-243-197-31	LID (REC)(AEP,UK)	
54	4-239-731-01	FOOT (FELT)	
55	4-231-954-01	SPRING (LID MD), TORSION	
56	X-4955-098-4	PANEL ASSY/W, FRONT (WHITE)(HK)	
56	X-4955-101-6	PANEL ASSY/S, FRONT (SILVER)(HK,KR)	
56	X-4955-104-6	PANEL ASSY/NT, FRONT (EXCEPT HK,KR)	
57	4-243-201-01	SPACER (LCD)	
58	4-243-192-01	INDICATOR (POWER)	
59	4-243-204-01	BUTTON (POWER)	
60	4-243-222-01	WINDOW (IR)(HK,KR)	
60	4-243-222-11	WINDOW (IR)(EXCEPT HK,KR)	
61	4-243-206-02	BUTTON (FUNC) ASSY	
62	4-243-191-13	RING (FUNCTION)	
63	4-243-223-03	BUTTON (PLAY)(EXCEPT (SILVER)(HK,KR))	

Ref. No.	Part No.	Description	Remarks
63	4-243-223-13	BUTTON (PLAY)(SILVER)(HK,KR)	
64	4-243-198-01	PLATE, LIGHT GUIDE	
65	4-243-208-01	BUTTON (MD EJECT) (EXCEPT (SILVER)(HK,KR))	
65	4-243-208-11	BUTTON (MD EJECT)(SILVER)(HK,KR)	
66	4-243-218-02	BUTTON (CD) ASSY	
67	4-243-216-02	BUTTON (REC)(WHITE)(HK)	
67	4-243-216-12	BUTTON (REC)(SILVER)(HK,KR)	
67	4-243-216-23	BUTTON (REC)(AEP,UK)(EXCEPT HK,KR)	
68	4-243-225-01	SHEET, DIFFUSION	
69	A-4732-584-A	H/P BOARD, COMPLETE	
71	4-951-620-01	SCREW (2.6X8), +BVTP	
72	4-243-199-01	HOLDER (LCD)	
73	1-773-114-11	WIRE (FLAT TYPE)(19 CORE)	
75	A-4732-580-A	PANEL BOARD, COMPLETE (EXCEPT (SILVER)(HK,KR))	
75	A-4734-754-A	PANEL BOARD, COMPLETE (SILVER)(HK,KR)	
76	1-686-400-11	LED BOARD (EXCEPT (SILVER)(HK,KR))	
76	1-686-406-12	LED BOARD (SILVER)(HK,KR)	
77	4-243-202-02	INDICATOR (MD LIGHT)	
78	4-236-666-01	CUSHION (LCD)	
LCD401	1-804-785-11	DISPLAY PANEL, LIQUID CRYSTAL	

7-3. Back Panel Section

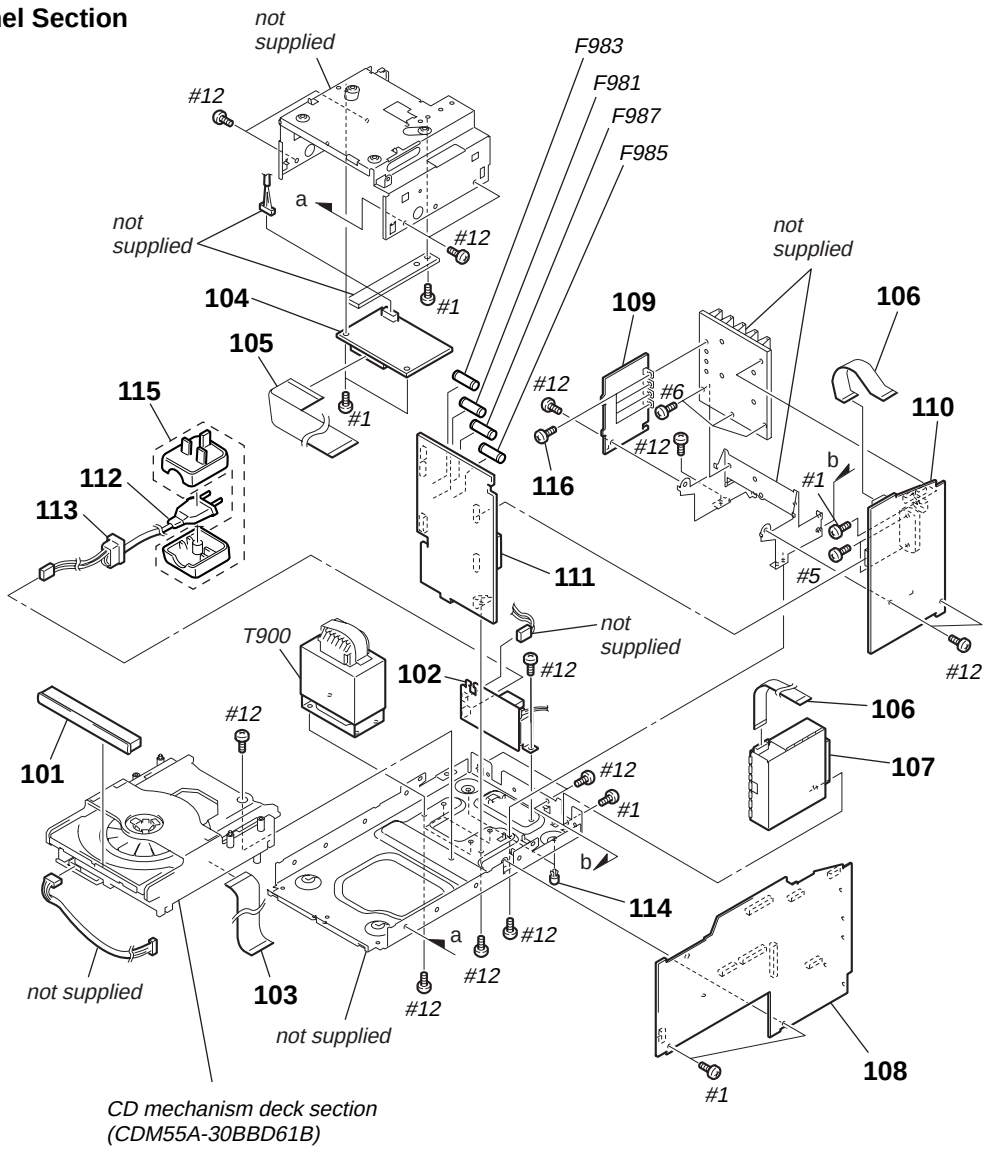

Ref. No.	Part No.	Description	Remarks
101	X-4955-203-2	PANEL, LOADING ASSY	
103	1-824-699-11	WIRE (FLAT TYPE)(23 CORE)	
104	A-4730-631-A	DIGITAL BOARD, COMPLETE	
105	1-827-294-11	WIRE (FLAT TYPE)(25 CORE)	
106	1-769-940-11	WIRE (FLAT TYPE)(11 CORE)(EXCEPT AEP,UK)	
106	1-773-004-11	WIRE (FLAT TYPE)(15 CORE)(AEP,UK)	
107	1-693-604-11	TUNER (FM/AM)(AEP,UK)	
107	1-693-605-11	TUNER (FM/AM)(HK,KR,CH,AUS)	
107	1-693-623-31	TUNER (FM/AM)(CND)	
108	A-4732-582-A	MAIN BOARD, COMPLETE (AEP,UK)	
108	A-4732-589-A	MAIN BOARD, COMPLETE	(EXCEPT CND,AEP,UK)
108	A-4747-421-A	MAIN BOARD, COMPLETE (CND)	
110	A-4732-583-A	AMP BOARD, COMPLETE	
111	A-4732-585-A	POWER BOARD, COMPLETE	
⚠112	1-769-079-12	CORD, POWER (KR)	
⚠112	1-775-787-62	CORD, POWER (AEP,UK,HK)	
⚠112	1-775-790-61	CORD, POWER (AUS)	
⚠112	1-782-464-12	CORD, POWER (CH)	
⚠112	1-783-531-32	CORD, POWER (CND)	
113	3-703-244-00	BUSHING (2104), CORD	
114	3-531-576-01	RIVET	
⚠115	1-770-019-51	ADAPTOR, CONVERSION PLUG (UK,HK)	

Ref. No.	Part No.	Description	Remarks
116	4-951-620-01	SCREW (2.6X8) +BVTP	
⚠F981	1-533-452-11	FUSE, GLASS TUBE (DIA. 5)(4A/125V)(CND)	
⚠F981	1-533-471-11	FUSE, GLASS TUBE (DIA. 5)(T4AL/250V)	(EXCEPT CND)
⚠F983	1-533-452-11	FUSE, GLASS TUBE (DIA. 5)(4A/125V)(CND)	
⚠F983	1-533-471-11	FUSE, GLASS TUBE (DIA. 5)(T4AL/250V)	(EXCEPT CND)
⚠F985	1-533-452-11	FUSE, GLASS TUBE (DIA. 5)(4A/125V)(CND)	
⚠F985	1-533-471-11	FUSE, GLASS TUBE (DIA. 5)(T4AL/250V)	(EXCEPT CND)
⚠F987	1-533-452-11	FUSE, GLASS TUBE (DIA. 5)(4A/125V)(CND)	
⚠F987	1-533-471-11	FUSE, GLASS TUBE (DIA. 5)(T4AL/250V)	(EXCEPT CND)
⚠T900	1-437-950-11	TRANSFORMER, POWER(AEP,UK,HK,CH)	
⚠T900	1-437-951-11	TRANSFORMER, POWER(KR)	
⚠T900	1-439-874-11	TRANSFORMER, POWER(CND)	
#1	7-685-646-79	SCREW +BVTP 3X8 TYPE2 IT-3	
#3	7-685-861-01	SCREW +BVTT 2.6X5 (S)	
#5	7-685-650-79	SCREW +BVTP 3X16 TYPE2 IT-3	
#6	7-685-647-79	SCREW +BVTP 3X10 TYPE2 TT(B)	
#12	7-685-871-01	SCREW +BVTT 3X6 (S)	

The components identified by mark ⚠ or dotted line with mark ⚠ are critical for safety. Replace only with part number specified.	Les composants identifiés par une marque ⚠ sont critiques pour la sécurité. Ne les remplacer que par une pièce portant le numéro spécifié.

7-4. MD Mechanism Deck Section-1 (MDM-7S2D)

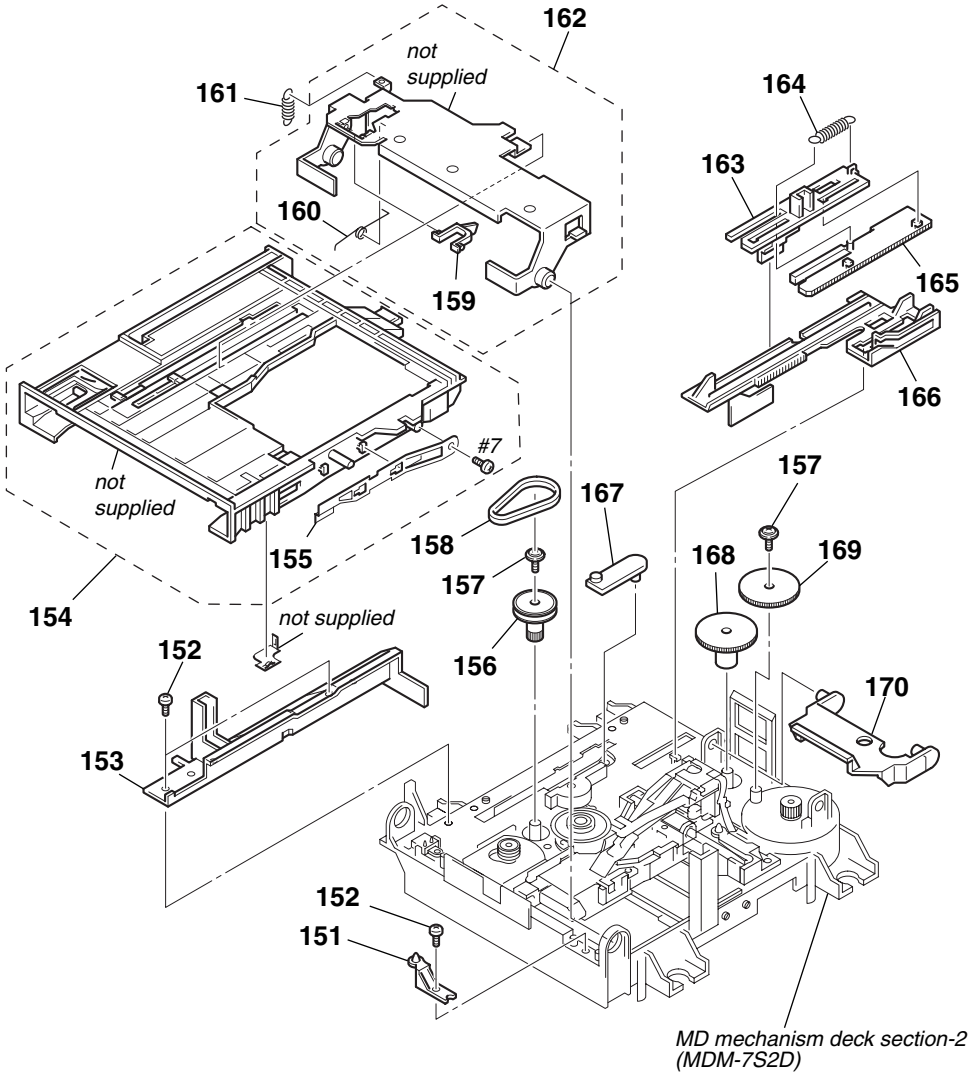

Ref. No.	Part No.	Description	Remarks	Ref. No.	Part No.	Description	Remarks
* 151	4-996-267-01	BASE (BU-D)		162	A-4680-638-B	RETAINER COMPLETE ASSY	
153	4-226-994-01	GUIDE (L)		163	4-226-996-01	LIMITTER (EJ)	
154	A-4735-075-B	HOLDER ASSY		164	4-227-013-01	SPRING (EJ), TENSION	
155	X-4952-665-1	SPRING (SHT) ASSY, LEAF		165	4-226-995-01	SLIDER (EJ)	
156	4-227-002-01	GEAR, PULLEY		166	4-226-997-04	SLIDER	
157	3-372-761-01	SCREW (M1.7), TAPPING		167	4-226-998-01	LEVER (CHG)	
158	4-227-025-01	BELT (LOADING)		168	4-227-007-01	GEAR (SB)	
159	A-468-063-8A	LOCK (HOLDER)		169	4-227-006-01	GEAR (SA)	
160	4-229-533-02	SPRING (STOPPER), TORSION		170	4-226-999-01	LEVER (HEAD)	
161	4-227-012-01	SPRING (HOLDER), TENSION		#7	7-685-850-04	SCREW +BVTT 2X3 (S)	

7-5. MD Mechanism Deck Section-2 (MDM-7S2D)

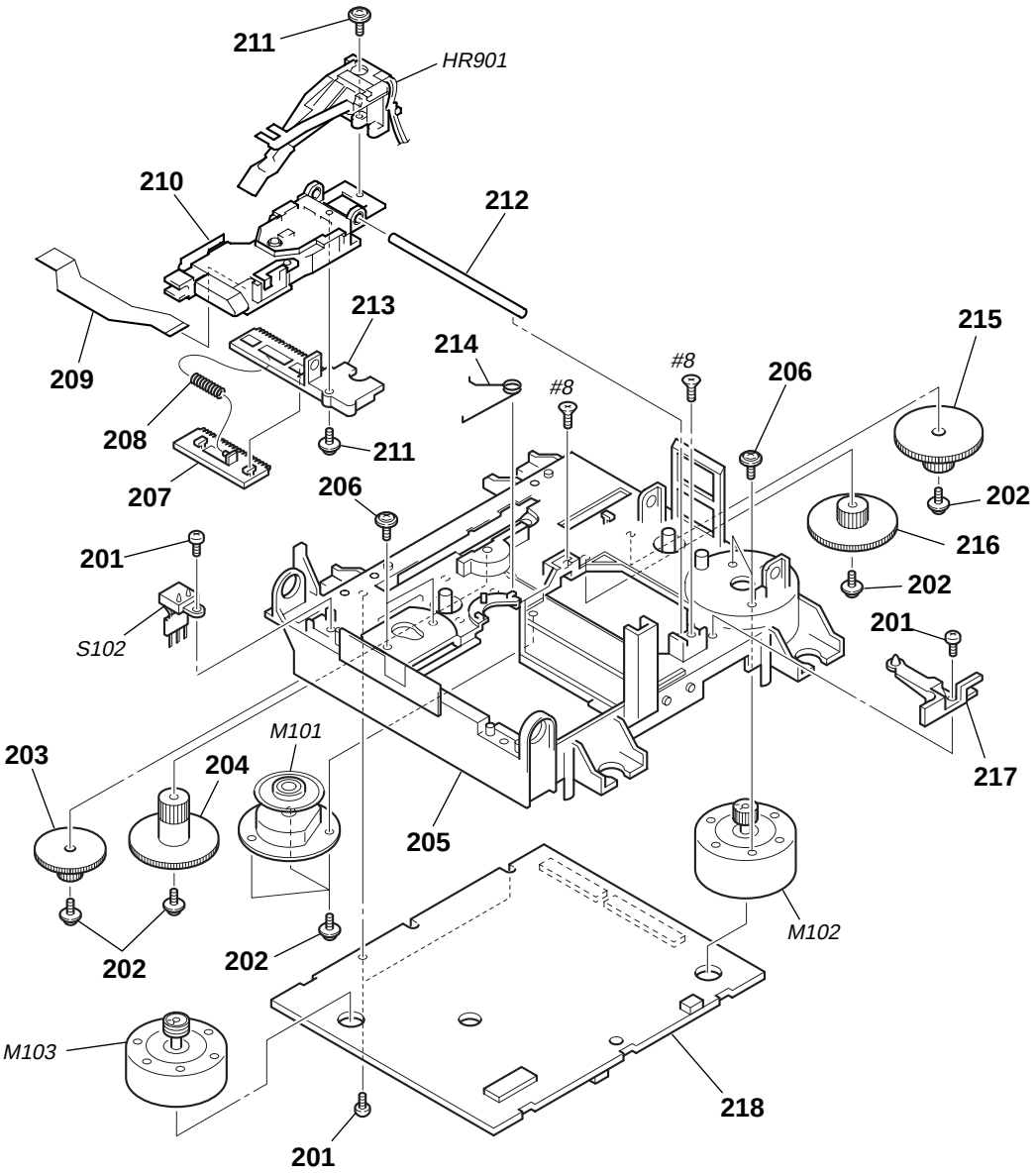

Ref. No.	Part No.	Description	Remarks
201	4-231-319-01	SCREW (2X6) CZN, +B (P) TRI	
203	4-227-008-01	GEAR (SC)	
204	4-227-009-01	GEAR (SD)	
205	4-226-989-01	CHASSIS	
206	4-232-270-01	SCREW (1.7X3.5), +PWH	
207	4-226-993-01	RACK	
208	4-227-014-01	SPRING (RACK), COMPRESSION	
209	1-678-514-11	PWB, FLEXIBLE	
⚠210	A-467-297-6A	DEVICE,MINI DISK KMS-262EP	
211	4-988-560-01	SCREW (+P 1.7X6)	
212	4-996-265-01	SHAFT, MAIN	
213	4-226-992-01	BASE, SL	
214	4-230-716-01	SPRING (SPDL), TORSION	
215	4-227-004-01	GEAR (LC)	
216	4-227-005-01	GEAR (LD)	
217	4-226-990-04	BASE (BU-A)	
218	A-4731-095-A	BD (MD) BOARD, COMPLETE	
HR901	1-500-670-22	HEAD, OVER LIGHT	
M101	A-4735-757-A	MOTOR ASSY, SPINDLE	
M102	A-4672-900-A	MOTOR ASSY, SLED	
M103	A-4672-975-A	MOTOR ASSY, LOADING	
S102	1-771-957-11	SWITCH, PUSH (2 KEY)(REFLECT/PROTECT)	
#8	7-685-204-19	SCREW +KTP 2X6 TYPE2 NON-SLIT	

The components identified by mark ⚠ or dotted line with mark ⚠ are critical for safety. Replace only with part number specified.	Les composants identifiés par une marque ⚠ sont critiques pour la sécurité. Ne les remplacer que par une pièce portant le numéro spécifié.

7-6. CD Mechanism Deck Section-1 (CDM55A-30BBD61B)

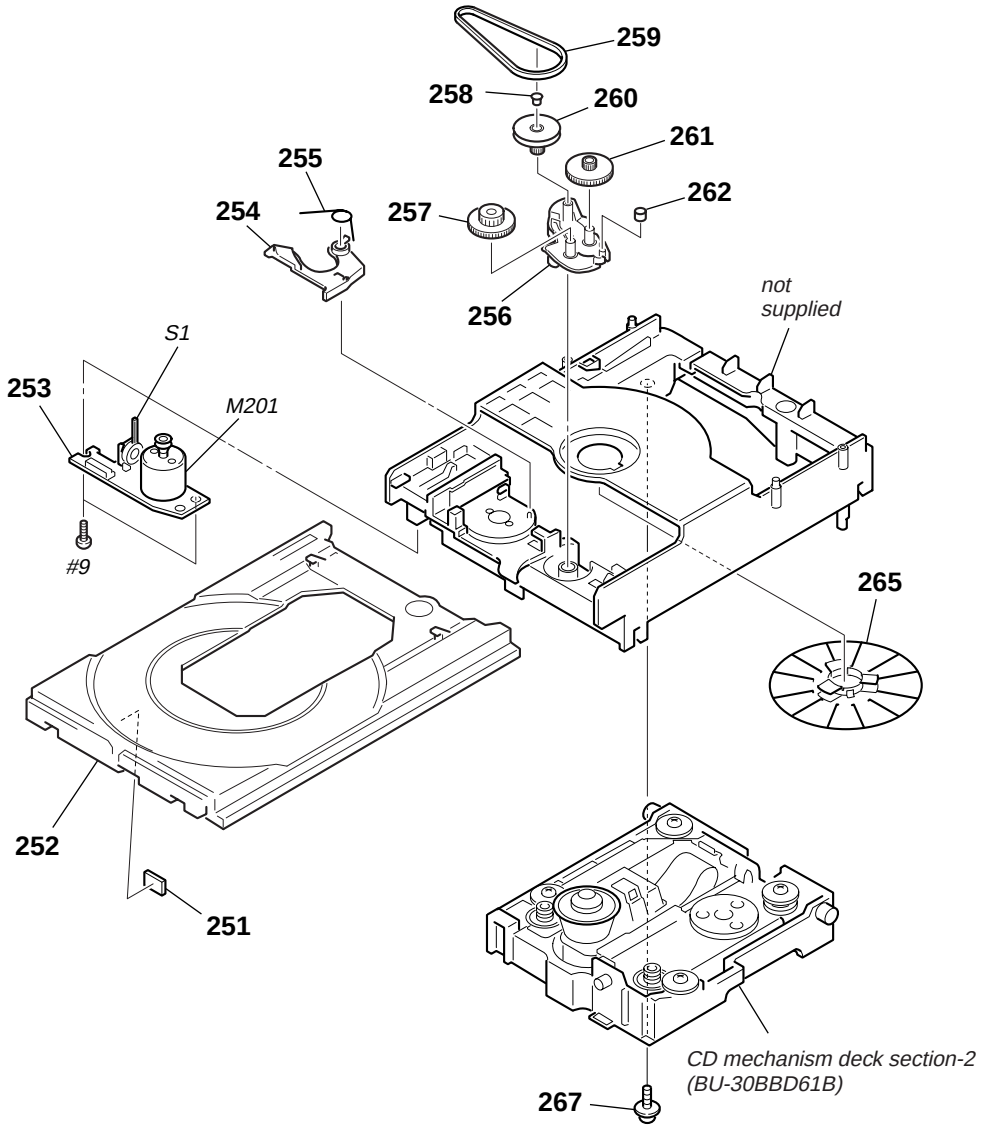

Ref. No.	Part No.	Description	Remarks
251	4-925-315-31	DAMPER	
252	4-224-894-22	TRAY (CDM55D)	
254	4-220-229-02	LEVER (SW)	
255	4-220-239-01	SPRING, TORSION	
256	4-220-233-01	CAM (CDM55)	
257	4-220-238-01	GEAR (B)	
258	4-227-598-01	SPACER (55)	
259	4-221-816-01	BELT (CDM55)	
260	4-220-234-01	PULLEY (LDG)	
261	4-220-237-01	GEAR (A)	
262	4-221-815-11	ROLLER	
265	X-4953-668-2	PULLEY (4TCD) ASSY	
267	4-985-672-01	SCREW (+PTPWHM2.6), FLOATING	
M201	A-4735-337-A	MOTOR (LD) ASSY (LOADING)	
#9	7-685-533-19	SCREW +BTP 2.6X6 TYPE2 N-S	

7-7. CD Mechanism Deck Section-2 (BU-30BBD61B)

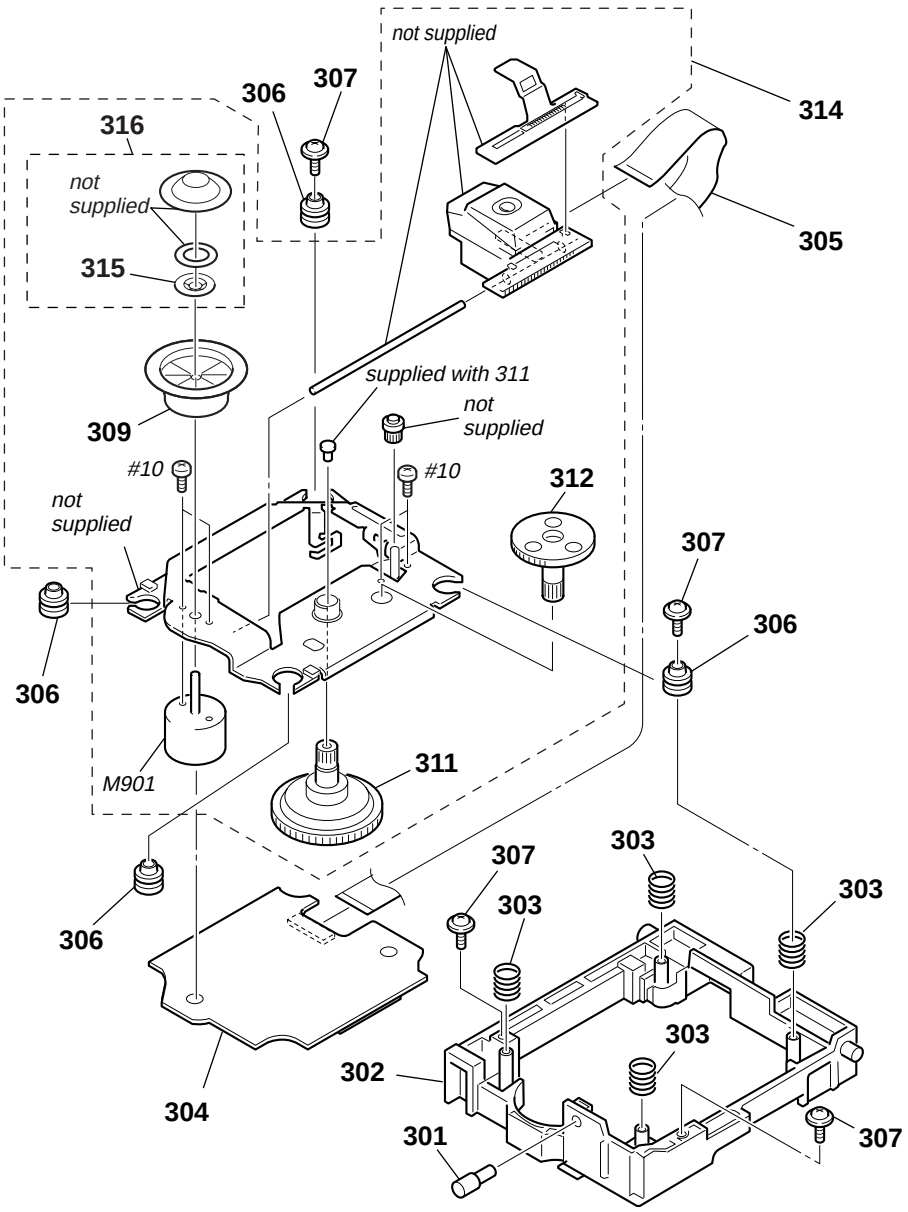

Ref. No.	Part No.	Description	Remarks
301	4-229-358-01	SHAFT (BU21)	
302	4-238-004-01	HOLDER (BU-30), BU	
303	4-227-045-31	SPRING (INSULATOR), COIL	
304	A-4727-463-A	BD (CD) BOARD, COMPLETE	
305	1-782-817-11	WIRE (FLAT TYPE)(16 CORE)	
306	4-231-451-01	INSULATOR (BU-30)	
307	4-227-899-01	SCREW (DIA. 12), FROATING	
309	A-4735-001-A	PULLEY ASSY, DISC	
311	4-233-832-01	GEAR (LB)	
312	4-233-831-01	GEAR (LA)	
⚠314	A-4735-885-A	BU-30B ASSY	
315	4-232-512-01	NUT, PUSH	
316	A-4735-000-A	CAP ASSY, CENTERING	
#10	7-627-853-28	SCREW, PRECISION +P 2X3 TYPE3	
M901	1-763-802-11	MOTOR, DC	

The components identified by mark ⚠ or dotted line with mark ⚠ are critical for safety. Replace only with part number specified.	Les composants identifiés par une marque ⚠ sont critiques pour la sécurité. Ne les remplacer que par une pièce portant le numéro spécifié.

SECTION 8
ELECTRICAL PARTS LIST

NOTE:
- Due to standardization, replacements in the parts list may be different from the parts specified in the diagrams or the components used on the set.
- -XX, -X mean standardized parts, so they may have some difference from the original one.
- Items marked "*" are not stocked since they are seldom required for routine service. Some delay should be anticipated when ordering these items.
- CAPACITORS:
  uF: µF
- COILS
  uH: µH
- RESISTORS
  All resistors are in ohms.
  METAL: metal-film resistor
  METAL OXIDE: Metal Oxide-film resistor
  F: nonflammable
- SEMICONDUCTORS
  In each case, u: µ, for example:
  uA...: µA... , uPA... , µPA... ,
  uPB... , µPB... , uPC... , µPC... ,
  uPD..., µPD...

When indicating parts by reference number, please include the board name.

- Abbreviation
  AUS : Australian model
  CH : Chinese model
  CND : Canadian model
  HK : Hong Kong model

The components identified by mark ⚠ or dotted line with mark ⚠ are critical for safety. Replace only with part number specified.

Les composants identifiés par une marque ⚠ sont critiques pour la sécurité. Ne les remplacer que par une pièce portant le numéro spécifié.

Ref. No.	Part No.	Description				Remarks
	A-4732-583-A	AMP BOARD, COMPLETE				
		**********				
		< CAPACITOR >				
C800	1-163-009-91	CERAMIC CHIP	0.001uF	10.00%	50V	
C802	1-163-005-91	CERAMIC CHIP	470PF	10.00%	50V	
C803	1-163-005-91	CERAMIC CHIP	470PF	10.00%	50V	
C804	1-126-967-11	ELECT	47uF	20.00%	50V	
C805	1-136-169-00	FILM	0.22uF	5.00%	50V	
C806	1-136-169-00	FILM	0.22uF	5.00%	50V	
C807	1-136-169-00	FILM	0.22uF	5.00%	50V	
C808	1-136-169-00	FILM	0.22uF	5.00%	50V	
C809	1-163-009-91	CERAMIC CHIP	0.001uF	10.00%	50V	
C810	1-163-009-91	CERAMIC CHIP	0.001uF	10.00%	50V	
C811	1-107-713-11	ELECT	4.7uF	20.00%	50V	
C813	1-126-963-11	ELECT	4.7uF	20.00%	50V	
C820	1-163-009-91	CERAMIC CHIP	0.001uF	10.00%	50V	
C821	1-126-963-11	ELECT	4.7uF	20.00%	50V	
C822	1-126-965-91	ELECT	22uF	20.00%	50V	
C823	1-163-038-91	CERAMIC CHIP	0.1uF		25V	
C831	1-126-964-11	ELECT	10uF	20.00%	50V	
C832	1-104-665-11	ELECT	100uF	20.00%	10V	
C833	1-126-961-11	ELECT	2.2uF	20.00%	50V	
C834	1-104-665-11	ELECT	100uF	20.00%	10V	
C845	1-126-964-11	ELECT	10uF	20.00%	50V	
C846	1-126-965-91	ELECT	22uF	20.00%	50V	
C852	1-163-005-91	CERAMIC CHIP	470PF	10.00%	50V	
C853	1-163-005-91	CERAMIC CHIP	470PF	10.00%	50V	
C854	1-126-967-11	ELECT	47uF	20.00%	50V	
C855	1-136-169-00	FILM	0.22uF	5.00%	50V	
C856	1-136-169-00	FILM	0.22uF	5.00%	50V	
C857	1-136-169-00	FILM	0.22uF	5.00%	50V	
C858	1-136-169-00	FILM	0.22uF	5.00%	50V	
C859	1-163-009-91	CERAMIC CHIP	0.001uF	10.00%	50V	
C860	1-163-009-91	CERAMIC CHIP	0.001uF	10.00%	50V	
C861	1-107-713-11	ELECT	4.7uF	20.00%	50V	
C863	1-126-963-11	ELECT	4.7uF	20.00%	50V	
C870	1-107-717-11	ELECT	47uF	20.00%	50V	
C891	1-128-549-11	ELECT	3300uF	20.00%	35V	
C892	1-128-549-11	ELECT	3300uF	20.00%	35V	
C893	1-163-009-91	CERAMIC CHIP	0.001uF	10.00%	50V	
C894	1-127-876-11	CERAMIC	0.01uF	10%	50V	
C895	1-163-009-91	CERAMIC CHIP	0.001uF	10.00%	50V	
		< CONNECTOR >				
CN802	1-568-830-11	CONNECTOR, FFC 11P				
* CN803	1-564-518-11	PLUG, CONNECTOR 3P				
* CN804	1-564-719-11	PIN, CONNECTOR (SMALL TYPE) 3P				
CN805	1-770-726-11	CONNECTOR, BOARD TO BOARD 6P				
		< DIODE >				
D801	8-719-988-61	DIODE 1SS355TE-17				
D820	8-719-988-61	DIODE 1SS355TE-17				
D821	8-719-988-61	DIODE 1SS355TE-17				
D822	8-719-988-61	DIODE 1SS355TE-17				
D823	8-719-017-67	DIODE MA8068-H-TX				
D831	8-719-988-61	DIODE 1SS355TE-17				
D841	8-719-988-61	DIODE 1SS355TE-17				
D842	8-719-988-61	DIODE 1SS355TE-17				
D843	8-719-988-61	DIODE 1SS355TE-17				
D851	8-719-988-61	DIODE 1SS355TE-17				
D871	8-719-988-61	DIODE 1SS355TE-17				
D881	8-719-988-61	DIODE 1SS355TE-17				
D890	8-719-988-61	DIODE 1SS355TE-17				
D891	8-719-988-61	DIODE 1SS355TE-17				
D892	8-719-988-61	DIODE 1SS355TE-17				
D893	8-719-988-61	DIODE 1SS355TE-17				
D894	8-719-988-61	DIODE 1SS355TE-17				
D895	8-719-988-61	DIODE 1SS355TE-17				
		< GROUND TERMINAL >				
EP802	1-537-771-21	TERMINAL BOARD, GROUND				
		< IC >				
IC803	6-703-084-01	IC STK403-030				
		< COIL >				
L801	1-422-009-13	COIL, AIR-CORE				
L851	1-422-009-13	COIL, AIR-CORE				
		< TRANSISTOR >				
Q801	8-729-026-49	TRANSISTOR 2SA1037AK-T146-QR				
Q820	8-729-140-04	TRANSISTOR 2SB1116A-TP-LK				
Q821	8-729-120-28	TRANSISTOR 2SC2412K-T-146-QR				
Q822	8-729-120-28	TRANSISTOR 2SC2412K-T-146-QR				
Q823	8-729-120-28	TRANSISTOR 2SC2412K-T-146-QR				
Q824	8-729-120-28	TRANSISTOR 2SC2412K-T-146-QR				
Q831	8-729-120-28	TRANSISTOR 2SC2412K-T-146-QR				
Q832	8-729-120-28	TRANSISTOR 2SC2412K-T-146-QR				
Q833	8-729-120-28	TRANSISTOR 2SC2412K-T-146-QR				
Q834	8-729-120-28	TRANSISTOR 2SC2412K-T-146-QR				
Q835	8-729-026-49	TRANSISTOR 2SA1037AK-T146-QR				
Q836	8-729-120-28	TRANSISTOR 2SC2412K-T-146-QR				

Ref. No.	Part No.	Description			Remarks
Q837	8-729-120-28	TRANSISTOR	2SC2412K-T-146-QR		
Q841	8-729-120-28	TRANSISTOR	2SC2412K-T-146-QR		
Q842	8-729-120-28	TRANSISTOR	2SC2412K-T-146-QR		
Q845	8-729-120-28	TRANSISTOR	2SC2412K-T-146-QR		
Q851	8-729-026-49	TRANSISTOR	2SA1037AK-T146-QR		
Q871	8-729-027-23	TRANSISTOR	DTA114EKA-T146		
Q872	8-729-027-23	TRANSISTOR	DTA114EKA-T146		
Q873	8-729-120-28	TRANSISTOR	2SC2412K-T-146-QR		
Q874	8-729-141-73	TRANSISTOR	2SC3624A-T1L15L16		
Q875	8-729-141-73	TRANSISTOR	2SC3624A-T1L15L16		
Q881	8-729-026-49	TRANSISTOR	2SA1037AK-T146-QR		
Q882	8-729-120-28	TRANSISTOR	2SC2412K-T-146-QR		
		< RESISTOR >			
R801	1-216-049-11	RES-CHIP	1K	5%	1/10W
R802	1-216-073-91	RES-CHIP	10K	5%	1/10W
R803	1-216-049-11	RES-CHIP	1K	5%	1/10W
R804	1-216-091-00	METAL CHIP	56K	5%	1/10W
R805	1-216-361-00	METAL OXIDE	0.22	5%	2W
R806	1-260-076-11	CARBON	10	5%	1/2W
R807	1-260-076-11	CARBON	10	5%	1/2W
R808	1-260-076-11	CARBON	10	5%	1/2W
R809	1-216-061-91	RES-CHIP	3.3K	5%	1/10W
R810	1-216-049-11	RES-CHIP	1K	5%	1/10W
R811	1-216-077-91	RES-CHIP	15K	5%	1/10W
R812	1-216-097-11	RES-CHIP	100K	5%	1/10W
R813	1-216-097-11	RES-CHIP	100K	5%	1/10W
R814	1-249-438-11	CARBON	56K	5%	1/4W
R816	1-215-864-00	METAL OXIDE	150	5%	1W
R817	1-215-864-00	METAL OXIDE	150	5%	1W
R818	1-216-097-11	RES-CHIP	100K	5%	1/10W
R820	1-216-081-00	METAL CHIP	22K	5%	1/10W
R821	1-216-049-11	RES-CHIP	1K	5%	1/10W
R822	1-216-089-91	RES-CHIP	47K	5%	1/10W
R823	1-216-073-91	RES-CHIP	10K	5%	1/10W
R824	1-216-049-11	RES-CHIP	1K	5%	1/10W
R825	1-216-065-91	RES-CHIP	4.7K	5%	1/10W
R826	1-216-089-91	RES-CHIP	47K	5%	1/10W
R827	1-216-097-11	RES-CHIP	100K	5%	1/10W
R828	1-249-425-11	CARBON	4.7K	5%	1/4W F
R829	1-249-425-11	CARBON	4.7K	5%	1/4W F
R830	1-216-097-11	RES-CHIP	100K	5%	1/10W
R831	1-216-097-11	RES-CHIP	100K	5%	1/10W
R832	1-216-065-91	RES-CHIP	4.7K	5%	1/10W
R833	1-249-425-11	CARBON	4.7K	5%	1/4W F
R834	1-216-085-91	RES-CHIP	33K	5%	1/10W
R835	1-216-081-00	METAL CHIP	22K	5%	1/10W
R836	1-216-073-91	RES-CHIP	10K	5%	1/10W
R837	1-216-073-91	RES-CHIP	10K	5%	1/10W
R839	1-216-097-11	RES-CHIP	100K	5%	1/10W
R840	1-216-089-91	RES-CHIP	47K	5%	1/10W
R842	1-216-073-91	RES-CHIP	10K	5%	1/10W
R843	1-216-049-11	RES-CHIP	1K	5%	1/10W
R845	1-216-085-91	RES-CHIP	33K	5%	1/10W
R846	1-216-073-91	RES-CHIP	10K	5%	1/10W
R847	1-216-065-91	RES-CHIP	4.7K	5%	1/10W
⚠R848	1-212-881-11	FUSIBLE	100	5%	1/4W
⚠R849	1-202-972-61	FUSIBLE	1	5%	1/4W

Ref. No.	Part No.	Description			Remarks
⚠R850	1-202-972-61	FUSIBLE	1	5%	1/4W
R851	1-216-049-11	RES-CHIP	1K	5%	1/10W
R852	1-216-073-91	RES-CHIP	10K	5%	1/10W
R853	1-216-049-11	RES-CHIP	1K	5%	1/10W
R854	1-216-091-00	METAL CHIP	56K	5%	1/10W
R855	1-216-361-00	METAL OXIDE	0.22	5%	2W
R856	1-260-076-11	CARBON	10	5%	1/2W
R857	1-260-076-11	CARBON	10	5%	1/2W
R858	1-260-076-11	CARBON	10	5%	1/2W
R859	1-216-061-91	RES-CHIP	3.3K	5%	1/10W
R860	1-216-049-11	RES-CHIP	1K	5%	1/10W
R861	1-216-077-91	RES-CHIP	15K	5%	1/10W
R862	1-216-097-11	RES-CHIP	100K	5%	1/10W
R863	1-216-097-11	RES-CHIP	100K	5%	1/10W
R864	1-249-437-11	CARBON	47K	5%	1/4W
R866	1-215-864-00	METAL OXIDE	150	5%	1W
R867	1-215-864-00	METAL OXIDE	150	5%	1W
R868	1-216-097-11	RES-CHIP	100K	5%	1/10W
R871	1-216-081-00	METAL CHIP	22K	5%	1/10W
R872	1-216-097-11	RES-CHIP	100K	5%	1/10W
R873	1-216-049-11	RES-CHIP	1K	5%	1/10W
R874	1-216-049-11	RES-CHIP	1K	5%	1/10W
R875	1-216-073-91	RES-CHIP	10K	5%	1/10W
R876	1-216-073-91	RES-CHIP	10K	5%	1/10W
R879	1-249-417-11	CARBON	1K	5%	1/4W F
R880	1-249-417-11	CARBON	1K	5%	1/4W F
R881	1-260-088-11	CARBON	120	5%	1/2W
R882	1-216-073-91	RES-CHIP	10K	5%	1/10W
R883	1-216-073-91	RES-CHIP	10K	5%	1/10W
R884	1-216-073-91	RES-CHIP	10K	5%	1/10W
R885	1-216-097-11	RES-CHIP	100K	5%	1/10W
		< RELAY >			
RY801	1-515-921-11	RELAY (SPEAKER PROTECT)			
		< THERMISTOR(POSITIVE) >			
THP841	1-807-796-11	THERMISTOR			
		< TERMINAL >			
TM801	1-816-048-11	TERMINAL BOARD (SPEAKER L/R)			

****

	A-4727-463-A	BD (CD) BOARD, COMPLETE			
		**********			
		< CAPACITOR >			
C101	1-164-315-11	CERAMIC CHIP	470PF	5.00%	50V
C102	1-107-826-11	CERAMIC CHIP	0.1uF	10.00%	16V
C103	1-164-315-11	CERAMIC CHIP	470PF	5.00%	50V
C104	1-162-967-11	CERAMIC CHIP	0.0033uF	10%	50V
C107	1-162-921-11	CERAMIC CHIP	33PF	5%	50V
C108	1-164-360-11	CERAMIC CHIP	0.1uF		16V
C109	1-164-360-11	CERAMIC CHIP	0.1uF		16V
C110	1-107-826-11	CERAMIC CHIP	0.1uF	10.00%	16V
C111	1-126-607-11	ELECT CHIP	47uF	20%	4V
C112	1-126-607-11	ELECT CHIP	47uF	20%	4V

The components identified by mark ⚠ or dotted line with mark ⚠ are critical for safety. Replace only with part number specified.	Les composants identifiés par une marque ⚠ sont critiques pour la sécurité. Ne les remplacer que par une pièce portant le numéro spécifié.

Ref. No.	Part No.	Description			Remarks
C113	1-126-209-11	ELECT CHIP	100uF	20.00%	4V
C114	1-162-964-11	CERAMIC CHIP	0.001uF	10%	50V
C115	1-126-205-11	ELECT CHIP	47uF	20%	6.3V
C117	1-164-360-11	CERAMIC CHIP	0.1uF		16V
C118	1-115-156-11	CERAMIC CHIP	1uF		10V
C119	1-115-156-11	CERAMIC CHIP	1uF		10V
C120	1-126-607-11	ELECT CHIP	47uF	20%	4V
C151	1-162-968-11	CERAMIC CHIP	0.0047uF	10%	50V
C152	1-115-416-11	CERAMIC CHIP	0.001uF	5.00%	25V
C153	1-164-360-11	CERAMIC CHIP	0.1uF		16V
C163	1-117-681-11	ELECT CHIP	100uF	20.00%	16V
C164	1-164-360-11	CERAMIC CHIP	0.1uF		16V
C165	1-124-779-00	ELECT CHIP	10uF	20%	16V
C166	1-164-360-11	CERAMIC CHIP	0.1uF		16V
C167	1-162-927-11	CERAMIC CHIP	100PF	5%	50V
C168	1-164-360-11	CERAMIC CHIP	0.1uF		16V
C169	1-164-360-11	CERAMIC CHIP	0.1uF		16V
C171	1-162-970-11	CERAMIC CHIP	0.01uF	10%	25V
C178	1-164-360-11	CERAMIC CHIP	0.1uF		16V
C179	1-164-360-11	CERAMIC CHIP	0.1uF		16V
C182	1-128-995-21	ELECT CHIP	100uF	20%	10V
C201	1-126-246-11	ELECT CHIP	220uF	20%	4V
C202	1-164-360-11	CERAMIC CHIP	0.1uF		16V
C203	1-162-915-11	CERAMIC CHIP	10PF	0.5PF	50V
C204	1-162-915-11	CERAMIC CHIP	10PF	0.5PF	50V
C205	1-164-360-11	CERAMIC CHIP	0.1uF		16V
C207	1-162-970-11	CERAMIC CHIP	0.01uF	10%	25V
C209	1-164-230-11	CERAMIC CHIP	220PF	5.00%	50V
C210	1-115-414-11	CERAMIC CHIP	820PF	5.00%	25V
C211	1-117-863-11	CERAMIC CHIP	0.47uF	10.00%	6.3V
C212	1-164-315-11	CERAMIC CHIP	470PF	5.00%	50V
C213	1-115-414-11	CERAMIC CHIP	820PF	5.00%	25V
C214	1-162-966-11	CERAMIC CHIP	0.0022uF	10%	50V
C215	1-117-863-11	CERAMIC CHIP	0.47uF	10.00%	6.3V
C216	1-162-970-11	CERAMIC CHIP	0.01uF	10%	25V
C218	1-164-360-11	CERAMIC CHIP	0.1uF		16V
C219	1-164-360-11	CERAMIC CHIP	0.1uF		16V
C221	1-164-360-11	CERAMIC CHIP	0.1uF		16V
C222	1-164-360-11	CERAMIC CHIP	0.1uF		16V
C223	1-125-838-11	CERAMIC CHIP	2.2uF	10%	6.3V
C224	1-164-360-11	CERAMIC CHIP	0.1uF		16V
C225	1-164-360-11	CERAMIC CHIP	0.1uF		16V
C227	1-164-360-11	CERAMIC CHIP	0.1uF		16V
C229	1-164-360-11	CERAMIC CHIP	0.1uF		16V
C230	1-113-682-11	TANTAL. CHIP	33uF	20.00%	10V
C231	1-128-995-21	ELECT CHIP	100uF	20%	10V
C232	1-164-360-11	CERAMIC CHIP	0.1uF		16V
C234	1-164-227-11	CERAMIC CHIP	0.022uF	10%	25V
C235	1-162-970-11	CERAMIC CHIP	0.01uF	10%	25V
C236	1-109-982-11	CERAMIC CHIP	1uF	10.00%	10V
C252	1-164-360-11	CERAMIC CHIP	0.1uF		16V
C253	1-164-360-11	CERAMIC CHIP	0.1uF		16V
C254	1-163-038-11	CERAMIC CHIP	0.1uF		16V
C255	1-125-838-11	CERAMIC CHIP	2.2uF	10%	6.3V
		< CONNECTOR >			
CN101	1-784-834-21	CONNECTOR,FFC(LIF(NON-ZIF))23P			
CN102	1-794-424-11	CONNECTOR, FCC/FPC 16P			

Ref. No.	Part No.	Description			Remarks
		< FERRITE BEAD >			
FB101	1-500-445-21	FERRITE	0uH		
		< IC >			
IC101	8-752-408-73	IC CXD3068Q			
IC102	8-759-713-71	IC AN41050			
IC103	8-752-089-74	IC CXA2581N-T4			
IC104	8-759-833-99	IC TC74HC4052AFT(EL)			
IC105	8-759-834-29	IC MC74VHC1G04DFT1			
IC201	8-759-460-72	IC BA033FP-E2			
		< COIL >			
L171	1-412-967-31	INDUCTOR	0.1uH		
L230	1-469-981-21	FERRITE	0uH		
		< TRANSISTOR >			
Q101	8-729-049-31	TRANSISTOR	2SB710A-RTX		
		< RESISTOR >			
R102	1-216-835-11	METAL CHIP	15K	5%	1/16W
R103	1-216-845-11	METAL CHIP	100K	5%	1/16W
R104	1-216-835-11	METAL CHIP	15K	5%	1/16W
R105	1-216-821-11	METAL CHIP	1K	5%	1/16W
R109	1-216-846-11	METAL CHIP	120K	5%	1/16W
R111	1-216-846-11	METAL CHIP	120K	5%	1/16W
R112	1-216-840-11	METAL CHIP	39K	5%	1/16W
R113	1-218-701-11	METAL CHIP	2.4K	5%	1/10W
R114	1-218-745-11	METAL CHIP	160K	5%	1/10W
R115	1-216-839-11	METAL CHIP	33K	5%	1/16W
R116	1-216-839-11	METAL CHIP	33K	5%	1/16W
R118	1-216-864-11	METAL CHIP	0	5%	1/16W
R120	1-216-846-11	METAL CHIP	120K	5%	1/16W
R122	1-216-845-11	METAL CHIP	100K	5%	1/16W
R123	1-216-797-11	METAL CHIP	10	5%	1/16W
R124	1-216-797-11	METAL CHIP	10	5%	1/16W
R125	1-216-839-11	METAL CHIP	33K	5%	1/16W
R126	1-216-839-11	METAL CHIP	33K	5%	1/16W
R151	1-216-833-11	METAL CHIP	10K	5%	1/16W
R152	1-216-837-11	METAL CHIP	22K	5%	1/16W
R165	1-216-864-11	METAL CHIP	0	5%	1/16W
R166	1-216-864-11	METAL CHIP	0	5%	1/16W
R167	1-216-864-11	METAL CHIP	0	5%	1/16W
R168	1-216-864-11	METAL CHIP	0	5%	1/16W
R169	1-216-864-11	METAL CHIP	0	5%	1/16W
R170	1-216-864-11	METAL CHIP	0	5%	1/16W
R177	1-216-821-11	METAL CHIP	1K	5%	1/16W
R178	1-216-864-11	METAL CHIP	0	5%	1/16W
R179	1-216-837-11	METAL CHIP	22K	5%	1/16W
R201	1-216-839-11	METAL CHIP	33K	5%	1/16W
R202	1-216-833-11	METAL CHIP	10K	5%	1/16W
R203	1-216-845-11	METAL CHIP	100K	5%	1/16W
R204	1-216-833-11	METAL CHIP	10K	5%	1/16W
R205	1-216-823-11	METAL CHIP	1.5K	5%	1/16W
R206	1-216-850-11	METAL CHIP	270K	5%	1/16W
R207	1-218-917-11	METAL CHIP	820K	5%	1/10W
R208	1-216-845-11	METAL CHIP	100K	5%	1/16W

BD (CD) BD (MD)

Ref. No.	Part No.	Description			Remarks
R209	1-216-809-11	METAL CHIP	100	5%	1/16W
R212	1-216-809-11	METAL CHIP	100	5%	1/16W
R213	1-216-864-11	METAL CHIP	0	5%	1/16W
R214	1-216-864-11	METAL CHIP	0	5%	1/16W
R215	1-216-864-11	METAL CHIP	0	5%	1/16W
R216	1-216-813-11	METAL CHIP	220	5%	1/16W
R217	1-216-829-11	METAL CHIP	4.7K	5%	1/16W
R218	1-216-821-11	METAL CHIP	1K	5%	1/16W
R219	1-216-821-11	METAL CHIP	1K	5%	1/16W
R226	1-216-809-11	METAL CHIP	100	5%	1/16W
R227	1-216-839-11	METAL CHIP	33K	5%	1/16W
R228	1-216-849-11	METAL CHIP	220K	5%	1/16W
R229	1-216-819-11	METAL CHIP	680	5%	1/16W
R230	1-216-864-11	METAL CHIP	0	5%	1/16W
R234	1-216-809-11	METAL CHIP	100	5%	1/16W
		< NETWORK RESISTOR >			
RN201	1-233-576-11	RES, CHIP NETWORK 100			
RN202	1-233-576-11	RES, CHIP NETWORK 100			
		< VARIABLE RESISTOR >			
RV101	1-223-997-21	RES, CARBON ADJ VAR 47K			
		< VIBRATOR >			
X201	1-767-518-11	VIBRATOR, CRYSTAL 33.8688MHz			

****

	A-4731-095-A	BD (MD) BOARD, COMPLETE			
		**********			
		< CAPACITOR >			
C101	1-117-720-11	CERAMIC CHIP	4.7uF		10V
C103	1-162-970-11	CERAMIC CHIP	0.01uF	10%	25V
C104	1-164-156-11	CERAMIC CHIP	0.1uF		25V
C105	1-135-259-11	TANTAL. CHIP	10uF	20.00%	6.3V
C106	1-135-259-11	TANTAL. CHIP	10uF	20.00%	6.3V
C107	1-164-227-11	CERAMIC CHIP	0.022uF	10%	25V
C108	1-164-156-11	CERAMIC CHIP	0.1uF		25V
C109	1-165-176-11	CERAMIC CHIP	0.047uF	10.00%	16V
C110	1-115-416-11	CERAMIC CHIP	0.001uF	5.00%	25V
C111	1-162-970-11	CERAMIC CHIP	0.01uF	10%	25V
C112	1-164-227-11	CERAMIC CHIP	0.022uF	10%	25V
C113	1-162-969-11	CERAMIC CHIP	0.0068uF	10%	25V
C114	1-162-966-11	CERAMIC CHIP	0.0022uF	10%	50V
C115	1-164-156-11	CERAMIC CHIP	0.1uF		25V
C116	1-117-720-11	CERAMIC CHIP	4.7uF		10V
C117	1-162-970-11	CERAMIC CHIP	0.01uF	10%	25V
C118	1-162-968-11	CERAMIC CHIP	0.0047uF	10%	50V
C119	1-125-837-91	CERAMIC CHIP	1uF	10%	6.3V
C120	1-110-563-11	CERAMIC CHIP	0.068uF	10.00%	16V
C121	1-162-970-11	CERAMIC CHIP	0.01uF	10%	25V
C122	1-164-677-11	CERAMIC CHIP	0.033uF	10.00%	16V
C175	1-164-156-11	CERAMIC CHIP	0.1uF		25V
C194	1-164-156-11	CERAMIC CHIP	0.1uF		25V
C205	1-162-966-11	CERAMIC CHIP	0.0022uF	10%	50V
C206	1-126-206-11	ELECT CHIP	100uF	20%	6.3V
C209	1-162-927-11	CERAMIC CHIP	100PF	5%	50V
C211	1-162-927-11	CERAMIC CHIP	100PF	5%	50V
C212	1-162-927-11	CERAMIC CHIP	100PF	5%	50V
C214	1-162-970-11	CERAMIC CHIP	0.01uF	10%	25V
C215	1-164-677-11	CERAMIC CHIP	0.033uF	10.00%	16V
C216	1-125-889-91	CERAMIC CHIP	2.2uF	10%	10V
C219	1-162-927-11	CERAMIC CHIP	100PF	5%	50V
C220	1-125-891-11	CERAMIC CHIP	0.47uF	10.00%	10V
C221	1-162-970-11	CERAMIC CHIP	0.01uF	10%	25V
C230	1-164-156-11	CERAMIC CHIP	0.1uF		25V
C231	1-164-156-11	CERAMIC CHIP	0.1uF		25V
C233	1-164-156-11	CERAMIC CHIP	0.1uF		25V
C234	1-164-156-11	CERAMIC CHIP	0.1uF		25V
C235	1-164-156-11	CERAMIC CHIP	0.1uF		25V
C240	1-164-156-11	CERAMIC CHIP	0.1uF		25V
C241	1-164-156-11	CERAMIC CHIP	0.1uF		25V
C242	1-164-156-11	CERAMIC CHIP	0.1uF		25V
C250	1-164-156-11	CERAMIC CHIP	0.1uF		25V
C251	1-164-156-11	CERAMIC CHIP	0.1uF		25V
C252	1-164-156-11	CERAMIC CHIP	0.1uF		25V
C253	1-164-156-11	CERAMIC CHIP	0.1uF		25V
C254	1-162-970-11	CERAMIC CHIP	0.01uF	10%	25V
C255	1-164-156-11	CERAMIC CHIP	0.1uF		25V
C299	1-164-156-11	CERAMIC CHIP	0.1uF		25V
C301	1-164-156-11	CERAMIC CHIP	0.1uF		25V
C302	1-164-156-11	CERAMIC CHIP	0.1uF		25V
C405	1-164-156-11	CERAMIC CHIP	0.1uF		25V
C406	1-162-970-11	CERAMIC CHIP	0.01uF	10%	25V
C407	1-164-156-11	CERAMIC CHIP	0.1uF		25V
C409	1-164-156-11	CERAMIC CHIP	0.1uF		25V
C410	1-126-206-11	ELECT CHIP	100uF	20%	6.3V
C411	1-117-720-11	CERAMIC CHIP	4.7uF		10V
C412	1-162-964-11	CERAMIC CHIP	0.001uF	10%	50V
C490	1-164-156-11	CERAMIC CHIP	0.1uF		25V
C501	1-128-795-91	ELECT CHIP	470PF	10%	630V
C502	1-164-156-11	CERAMIC CHIP	0.1uF		25V
C503	1-164-156-11	CERAMIC CHIP	0.1uF		25V
C504	1-117-370-11	CERAMIC CHIP	10uF		10V
C505	1-126-206-11	ELECT CHIP	100uF	20%	6.3V
C550	1-135-349-21	ELECT CHIP	22uF	20%	20V
C701	1-164-156-11	CERAMIC CHIP	0.1uF		25V
C702	1-117-720-11	CERAMIC CHIP	4.7uF		10V
C703	1-164-156-11	CERAMIC CHIP	0.1uF		25V
C704	1-165-176-11	CERAMIC CHIP	0.047uF	10.00%	16V
C801	1-162-918-11	CERAMIC CHIP	18PF	5.00%	50V
C802	1-162-917-11	CERAMIC CHIP	15PF	5%	50V
C803	1-115-416-11	CERAMIC CHIP	0.001uF	5.00%	25V
C809	1-117-720-11	CERAMIC CHIP	4.7uF		10V
C901	1-126-206-11	ELECT CHIP	100uF	20%	6.3V
C902	1-164-156-11	CERAMIC CHIP	0.1uF		25V
C903	1-126-206-11	ELECT CHIP	100uF	20%	6.3V
C904	1-164-156-11	CERAMIC CHIP	0.1uF		25V
C905	1-126-206-11	ELECT CHIP	100uF	20%	6.3V
C907	1-162-970-11	CERAMIC CHIP	0.01uF	10%	25V
C908	1-117-370-11	CERAMIC CHIP	10uF		10V
C909	1-104-852-11	TANTAL. CHIP	22uF	20.00%	10V
C911	1-162-970-11	CERAMIC CHIP	0.01uF	10%	25V
C998	1-164-156-11	CERAMIC CHIP	0.1uF		25V
C999	1-164-156-11	CERAMIC CHIP	0.1uF		25V

Ref. No.	Part No.	Description			Remarks
C1102	1-115-416-11	CERAMIC CHIP	0.001uF	5.00%	25V
		< CONNECTOR >			
CN101	1-766-833-21	CONNECTOR, FFC/FPC (ZIF) 21P			
CN102	1-784-835-21	CONNECTOR,FFC(LIF(NON-ZIF))27P			
CN103	1-784-869-41	CONNECTOR,FFC(LIF(NON-ZIF))17P			
* CN104	1-580-055-21	PIN, CONNECTOR (SMD) 2P			
CN105	1-784-859-21	CONNECTOR, FFC(LIF(NON-ZIF))7P			
		< DIODE >			
D101	8-719-988-61	DIODE 1SS355TE-17			
D501	8-719-046-86	DIODE F1J6TP			
D502	8-719-046-86	DIODE F1J6TP			
		< IC >			
IC101	8-752-080-95	IC CXA2523AR			
IC152	6-700-052-01	IC MSM51V17400F-50TS-K			
IC181	8-759-481-17	IC MC74ACT08DTR2			
IC195	8-759-641-86	IC BR24C16F-E2			
IC201	8-752-414-89	IC CXD2664R			
IC401	8-759-836-79	IC BH6519FS-E2			
IC701	8-759-473-51	IC TLV2361CDBV			
IC803	6-701-793-01	IC CY24115-2SCT			
IC926	8-759-835-63	IC NJM2391DL1-26(TE1)			
IC933	8-759-460-72	IC BA033FP-E2			
		< COIL >			
L8	1-414-760-21	FERRITE	0uH		
L10	1-469-981-21	FERRITE	0uH		
L122	1-414-760-21	FERRITE	0uH		
L201	1-414-760-21	FERRITE	0uH		
L202	1-469-981-21	FERRITE	0uH		
L203	1-414-760-21	FERRITE	0uH		
L401	1-400-050-11	FERRITE	0uH		
L402	1-400-050-11	FERRITE	0uH		
L501	1-400-050-11	FERRITE	0uH		
L502	1-400-050-11	FERRITE	0uH		
L550	1-414-760-21	FERRITE	0uH		
L601	1-469-981-21	FERRITE	0uH		
L602	1-469-981-21	FERRITE	0uH		
L603	1-414-760-21	FERRITE	0uH		
L701	1-414-760-21	FERRITE	0uH		
L801	1-414-760-21	FERRITE	0uH		
* L899	1-500-282-11	FERRITE	0uH		
		< TRANSISTOR >			
Q181	8-729-048-87	TRANSISTOR	2SJ518AZTR		
Q182	8-729-048-88	TRANSISTOR	2SK2788VYTR		
Q201	8-729-403-35	TRANSISTOR	UN5113-TX		
Q202	8-729-101-07	TRANSISTOR	2SB798-T1DK		
Q203	8-729-403-35	TRANSISTOR	UN5113-TX		
Q701	8-729-402-93	TRANSISTOR	UN5214-TX		
Q702	8-729-903-10	TRANSISTOR	FMW1-T-148		
Q703	8-729-402-93	TRANSISTOR	UN5214-TX		
Q704	8-729-026-53	TRANSISTOR	2SA1576A-T106-QR		
		< RESISTOR >			
R101	1-216-298-00	METAL CHIP	2.2	5%	1/10W

Ref. No.	Part No.	Description			Remarks
R102	1-219-724-11	METAL CHIP	1	1%	1/4W
R103	1-216-829-11	METAL CHIP	4.7K	5%	1/16W
R104	1-216-853-11	METAL CHIP	470K	5%	1/16W
R105	1-216-863-11	METAL CHIP	3.3M	5%	1/10W
R106	1-216-845-11	METAL CHIP	100K	5%	1/16W
R107	1-216-819-11	METAL CHIP	680	5%	1/16W
R108	1-216-825-11	METAL CHIP	2.2K	5%	1/16W
R109	1-216-829-11	METAL CHIP	4.7K	5%	1/16W
R110	1-216-853-11	METAL CHIP	470K	5%	1/16W
R111	1-216-833-11	METAL CHIP	10K	5%	1/16W
R112	1-216-845-11	METAL CHIP	100K	5%	1/16W
R113	1-216-833-11	METAL CHIP	10K	5%	1/16W
R114	1-216-829-11	METAL CHIP	4.7K	5%	1/16W
R115	1-216-833-11	METAL CHIP	10K	5%	1/16W
R116	1-216-827-11	METAL CHIP	3.3K	5%	1/16W
R117	1-216-845-11	METAL CHIP	100K	5%	1/16W
R118	1-216-825-11	METAL CHIP	2.2K	5%	1/16W
R119	1-216-837-11	METAL CHIP	22K	5%	1/16W
R120	1-216-839-11	METAL CHIP	33K	5%	1/16W
R121	1-216-825-11	METAL CHIP	2.2K	5%	1/16W
R122	1-216-833-11	METAL CHIP	10K	5%	1/16W
R178	1-216-809-11	METAL CHIP	100	5%	1/16W
R201	1-216-815-11	METAL CHIP	330	5%	1/16W
R202	1-216-819-11	METAL CHIP	680	5%	1/16W
R203	1-216-809-11	METAL CHIP	100	5%	1/16W
R205	1-216-833-11	METAL CHIP	10K	5%	1/16W
R206	1-216-833-11	METAL CHIP	10K	5%	1/16W
R207	1-216-811-11	METAL CHIP	150	5%	1/16W
R208	1-216-821-11	METAL CHIP	1K	5%	1/16W
R209	1-216-815-11	METAL CHIP	330	5%	1/16W
R210	1-216-839-11	METAL CHIP	33K	5%	1/16W
R211	1-216-857-11	METAL CHIP	1M	5%	1/16W
R212	1-216-851-11	METAL CHIP	330K	5%	1/16W
R214	1-216-845-11	METAL CHIP	100K	5%	1/16W
R216	1-216-864-11	METAL CHIP	0	5%	1/16W
R217	1-216-833-11	METAL CHIP	10K	5%	1/16W
R218	1-216-864-11	METAL CHIP	0	5%	1/16W
R219	1-216-809-11	METAL CHIP	100	5%	1/16W
R223	1-216-833-11	METAL CHIP	10K	5%	1/16W
R227	1-414-555-21	FERRITE	0uH		
R280	1-216-821-11	METAL CHIP	1K	5%	1/16W
R298	1-216-809-11	METAL CHIP	100	5%	1/16W
R299	1-216-864-11	METAL CHIP	0	5%	1/16W
R301	1-216-833-11	METAL CHIP	10K	5%	1/16W
R302	1-216-833-11	METAL CHIP	10K	5%	1/16W
R303	1-216-833-11	METAL CHIP	10K	5%	1/16W
R501	1-216-295-91	SHORT CHIP	0		
R551	1-216-841-11	METAL CHIP	47K	5%	1/16W
R552	1-216-841-11	METAL CHIP	47K	5%	1/16W
R553	1-216-841-11	METAL CHIP	47K	5%	1/16W
R701	1-216-821-11	METAL CHIP	1K	5%	1/16W
R702	1-216-821-11	METAL CHIP	1K	5%	1/16W
R703	1-216-821-11	METAL CHIP	1K	5%	1/16W
R704	1-216-839-11	METAL CHIP	33K	5%	1/16W
R705	1-216-829-11	METAL CHIP	4.7K	5%	1/16W
R706	1-218-855-11	METAL CHIP	2.2K	0.5%	1/10W
R707	1-218-863-11	METAL CHIP	4.7K	0.5%	1/10W
R708	1-218-863-11	METAL CHIP	4.7K	0.5%	1/10W

Ref. No.	Part No.	Description			Remarks
R709	1-218-855-11	METAL CHIP	2.2K	0.5%	1/10W
R710	1-218-887-11	METAL CHIP	47K	0.5%	1/10W
R711	1-216-833-11	METAL CHIP	10K	5%	1/16W
R712	1-216-809-11	METAL CHIP	100	5%	1/16W
R713	1-216-833-11	METAL CHIP	10K	5%	1/16W
R801	1-216-857-11	METAL CHIP	1M	5%	1/16W
R803	1-216-864-11	METAL CHIP	0	5%	1/16W
R805	1-216-807-11	METAL CHIP	68	5%	1/16W
R810	1-216-823-11	METAL CHIP	1.5K	5%	1/16W
R812	1-216-864-11	METAL CHIP	0	5%	1/16W
R814	1-216-864-11	METAL CHIP	0	5%	1/16W
R999	1-216-864-11	METAL CHIP	0	5%	1/16W
		< SWITCH >			
S101	1-762-596-21	SWITCH, PUSH (1 KEY)			
S103	1-771-956-21	SWITCH, PUSH (1 KEY)			
S104	1-771-955-21	SWITCH, PUSH (1 KEY)			
S105	1-771-955-21	SWITCH, PUSH (1 KEY)			
		< VIBRATOR >			
X804	1-795-535-21	VIBRATOR, CRYSTAL 11.2896MHz			

****

	A-4730-631-A	DIGITAL BOARD, COMPLETE			
		**********			
		< CAPACITOR >			
C701	1-162-974-11	CERAMIC CHIP	0.01uF		50V
C702	1-162-974-11	CERAMIC CHIP	0.01uF		50V
C703	1-162-974-11	CERAMIC CHIP	0.01uF		50V
C705	1-126-392-11	ELECT CHIP	100uF	20.00%	6.3V
C706	1-164-360-11	CERAMIC CHIP	0.1uF		16V
C707	1-164-360-11	CERAMIC CHIP	0.1uF		16V
C708	1-126-392-11	ELECT CHIP	100uF	20.00%	6.3V (AEP,UK,HK)
C711	1-126-392-11	ELECT CHIP	100uF	20.00%	6.3V
C712	1-164-360-11	CERAMIC CHIP	0.1uF		16V
C713	1-164-360-11	CERAMIC CHIP	0.1uF		16V
C714	1-126-392-11	ELECT CHIP	100uF	20.00%	6.3V
C716	1-164-360-11	CERAMIC CHIP	0.1uF		16V
C719	1-162-927-11	CERAMIC CHIP	100PF	5%	50V
C720	1-162-927-11	CERAMIC CHIP	100PF	5%	50V
C721	1-162-927-11	CERAMIC CHIP	100PF	5%	50V
C722	1-164-360-11	CERAMIC CHIP	0.1uF		16V
C724	1-126-392-11	ELECT CHIP	100uF	20.00%	6.3V
C725	1-164-360-11	CERAMIC CHIP	0.1uF		16V
C726	1-164-360-11	CERAMIC CHIP	0.1uF		16V
C727	1-164-360-11	CERAMIC CHIP	0.1uF		16V
C728	1-216-833-11	METAL CHIP	10K	5%	1/16W
C730	1-164-360-11	CERAMIC CHIP	0.1uF		16V
C731	1-104-609-11	ELECT CHIP	100uF	20.00%	4V
C732	1-164-360-11	CERAMIC CHIP	0.1uF		16V
C733	1-162-927-11	CERAMIC CHIP	100PF	5%	50V
C734	1-162-927-11	CERAMIC CHIP	100PF	5%	50V
C735	1-162-974-11	CERAMIC CHIP	0.01uF		50V
C736	1-162-927-11	CERAMIC CHIP	100PF	5%	50V
C737	1-162-974-11	CERAMIC CHIP	0.01uF		50V
C738	1-164-360-11	CERAMIC CHIP	0.1uF		16V
C739	1-162-970-11	CERAMIC CHIP	0.01uF	10%	25V
C740	1-162-974-11	CERAMIC CHIP	0.01uF		50V
C741	1-164-360-11	CERAMIC CHIP	0.1uF		16V
C742	1-128-934-91	CERAMIC CHIP	0.33uF	20%	10V
C743	1-164-360-11	CERAMIC CHIP	0.1uF		16V
C745	1-164-360-11	CERAMIC CHIP	0.1uF		16V
C749	1-164-360-11	CERAMIC CHIP	0.1uF		16V
C751	1-104-609-11	ELECT CHIP	100uF	20.00%	4V
C752	1-164-360-11	CERAMIC CHIP	0.1uF		16V
C753	1-164-360-11	CERAMIC CHIP	0.1uF		16V
C754	1-164-360-11	CERAMIC CHIP	0.1uF		16V
C757	1-164-360-11	CERAMIC CHIP	0.1uF		16V
C758	1-162-920-11	CERAMIC CHIP	27PF	5%	50V
C759	1-162-919-11	CERAMIC CHIP	22PF	5%	50V
C760	1-164-360-11	CERAMIC CHIP	0.1uF		16V
C761	1-164-360-11	CERAMIC CHIP	0.1uF		16V
C762	1-164-360-11	CERAMIC CHIP	0.1uF		16V
C763	1-107-826-11	CERAMIC CHIP	0.1uF	10.00%	16V
C764	1-164-360-11	CERAMIC CHIP	0.1uF		16V
C765	1-104-610-11	ELECT CHIP	47uF	20.00%	4V
C766	1-164-360-11	CERAMIC CHIP	0.1uF		16V
C767	1-164-360-11	CERAMIC CHIP	0.1uF		16V
C768	1-164-360-11	CERAMIC CHIP	0.1uF		16V
C769	1-164-360-11	CERAMIC CHIP	0.1uF		16V
C770	1-164-360-11	CERAMIC CHIP	0.1uF		16V
C771	1-164-360-11	CERAMIC CHIP	0.1uF		16V
C772	1-104-609-11	ELECT CHIP	100uF	20.00%	4V
C781	1-126-392-11	ELECT CHIP	100uF	20.00%	6.3V
C791	1-126-394-11	ELECT CHIP	10uF	20.00%	16V (AEP,UK,HK)
C792	1-126-394-11	ELECT CHIP	10uF	20.00%	16V (AEP,UK,HK)
C793	1-126-394-11	ELECT CHIP	10uF	20.00%	16V (AEP,UK,HK)
C794	1-164-360-11	CERAMIC CHIP	0.1uF		16V
C795	1-164-360-11	CERAMIC CHIP	0.1uF		16V
C796	1-164-360-11	CERAMIC CHIP	0.1uF		16V
C797	1-164-360-11	CERAMIC CHIP	0.1uF		16V
C798	1-126-394-11	ELECT CHIP	10uF	20.00%	16V
		< CONNECTOR >			
CN701	1-784-384-11	CONNECTOR, FFC/FPC 27P			
CN702	1-784-376-11	CONNECTOR, FFC/FPC 17P			
CN703	1-793-311-11	CONNECTOR,FFC(LIF(NON-ZIF))25P			
CN704	1-778-315-11	PIN, CONNECTOR (PC BOARD) 5P			
		< DIODE >			
D751	8-719-210-33	DIODE EC10DS2TE12L			
D781	8-719-988-61	DIODE 1SS355TE-17			
D782	8-719-988-61	DIODE 1SS355TE-17			
D783	8-719-988-61	DIODE 1SS355TE-17			
D784	8-719-988-61	DIODE 1SS355TE-17			
D785	8-719-988-61	DIODE 1SS355TE-17			
D786	8-719-988-61	DIODE 1SS355TE-17			
		< FERRITE BEAD >			
FB702	1-500-445-21	FERRITE	0uH		
FB703	1-500-445-21	FERRITE	0uH		

Ref. No.	Part No.	Description			Remarks
FB704	1-500-445-21	FERRITE	0uH		
FB705	1-500-445-21	FERRITE	0uH		
FB706	1-500-445-21	FERRITE	0uH		
FB751	1-216-864-11	METAL CHIP	0	5%	1/16W
FB781	1-216-864-11	METAL CHIP	0	5%	1/16W
FB783	1-500-445-21	FERRITE	0uH		
FB784	1-216-864-11	METAL CHIP	0	5%	1/16W
FB785	1-216-864-11	METAL CHIP	0	5%	1/16W
FB786	1-216-864-11	METAL CHIP	0	5%	1/16W
FB787	1-216-864-11	METAL CHIP	0	5%	1/16W
FB788	1-500-445-21	FERRITE	0uH		
FB791	1-500-445-21	FERRITE	0uH		
		< IC >			
IC701	6-701-843-01	IC AK4584VQ			
IC702	6-803-121-01	IC M3062VMWP-A14GP			
IC703	6-802-288-01	IC MB89595CPFV-G-127-BND			
IC704	6-802-287-01	IC MB89537ACPFM-G-405-BND			
IC705	8-752-418-43	IC CXD1875TQ			
IC706	6-703-044-01	IC PCM2903EG/2K			
IC721	8-759-565-74	IC M62016FP-E1			
IC722	8-759-271-86	IC TC7SH04FU-TE85L			
IC751	6-701-680-01	IC PST3629NR			
IC752	8-759-591-61	IC TC7WHU04FU(TE12R)			
IC753	8-759-447-77	IC TC7WH74FU(TE12R)			
IC781	8-759-481-19	IC LB1830M-S-TE-L			
		< JUMPER RESISTOR >			
JR701	1-216-864-11	METAL CHIP	0	5%	1/16W
		< COIL >			
L781	1-416-670-11	INDUCTOR	33uH		
		< COIL >			
LF781	1-419-521-21	INDUCTOR	0uH		
		< TRANSISTOR >			
Q721	8-729-120-28	TRANSISTOR	2SC1623-T1-L5L6		
Q751	8-729-900-53	TRANSISTOR	DTC114EKA-T146		
Q781	8-729-015-76	TRANSISTOR	UN5211-TX		
		< RESISTOR >			
R701	1-216-809-11	METAL CHIP	100	5%	1/16W
R702	1-216-809-11	METAL CHIP	100	5%	1/16W
R703	1-216-817-11	METAL CHIP	470	5%	1/16W
R704	1-216-821-11	METAL CHIP	1K	5%	1/16W
R705	1-216-809-11	METAL CHIP	100	5%	1/16W
R706	1-216-809-11	METAL CHIP	100	5%	1/16W
R707	1-218-874-11	METAL CHIP	13K	0.5%	1/10W
R709	1-216-809-11	METAL CHIP	100	5%	1/16W
R710	1-216-793-11	METAL CHIP	4.7	5%	1/10W
R711	1-216-809-11	METAL CHIP	100	5%	1/16W
R712	1-216-793-11	METAL CHIP	4.7	5%	1/10W
R713	1-216-822-11	METAL CHIP	1.2K	5%	1/16W
R714	1-216-823-11	METAL CHIP	1.5K	5%	1/16W
R715	1-216-821-11	METAL CHIP	1K	5%	1/16W
R716	1-216-864-11	METAL CHIP	0	5%	1/16W

Ref. No.	Part No.	Description			Remarks
R717	1-216-864-11	METAL CHIP	0	5%	1/16W
R718	1-216-864-11	METAL CHIP	0	5%	1/16W
R721	1-216-833-11	METAL CHIP	10K	5%	1/16W
R722	1-216-833-11	METAL CHIP	10K	5%	1/16W
R725	1-216-833-11	METAL CHIP	10K	5%	1/16W
R726	1-216-833-11	METAL CHIP	10K	5%	1/16W
R730	1-216-833-11	METAL CHIP	10K	5%	1/16W
R731	1-216-857-11	METAL CHIP	1M	5%	1/16W
R732	1-216-809-11	METAL CHIP	100	5%	1/16W
R734	1-216-864-11	METAL CHIP	0	5%	1/16W
R735	1-216-864-11	METAL CHIP	0	5%	1/16W
R736	1-216-813-11	METAL CHIP	220	5%	1/16W
R737	1-216-813-11	METAL CHIP	220	5%	1/16W
R738	1-216-833-11	METAL CHIP	10K	5%	1/16W
R739	1-216-833-11	METAL CHIP	10K	5%	1/16W
R740	1-216-833-11	METAL CHIP	10K	5%	1/16W
R741	1-216-833-11	METAL CHIP	10K	5%	1/16W
R742	1-216-833-11	METAL CHIP	10K	5%	1/16W
R743	1-216-813-11	METAL CHIP	220	5%	1/16W
R744	1-216-833-11	METAL CHIP	10K	5%	1/16W
R745	1-216-833-11	METAL CHIP	10K	5%	1/16W
R746	1-216-833-11	METAL CHIP	10K	5%	1/16W
R747	1-216-837-11	METAL CHIP	22K	5%	1/16W
R748	1-216-845-11	METAL CHIP	100K	5%	1/16W
R749	1-216-849-11	METAL CHIP	220K	5%	1/16W
R751	1-216-833-11	METAL CHIP	10K	5%	1/16W
R753	1-216-857-11	METAL CHIP	1M	5%	1/16W
R755	1-216-864-11	METAL CHIP	0	5%	1/16W
R756	1-216-864-11	METAL CHIP	0	5%	1/16W
R758	1-216-833-11	METAL CHIP	10K	5%	1/16W
R759	1-216-833-11	METAL CHIP	10K	5%	1/16W
R761	1-216-833-11	METAL CHIP	10K	5%	1/16W
R763	1-216-823-11	METAL CHIP	1.5K	5%	1/16W
R764	1-216-802-11	METAL CHIP	27	5%	1/10W
R765	1-216-802-11	METAL CHIP	27	5%	1/10W
R766	1-216-823-11	METAL CHIP	1.5K	5%	1/16W
R767	1-216-835-11	METAL CHIP	15K	5%	1/16W
R768	1-216-835-11	METAL CHIP	15K	5%	1/16W
R769	1-216-835-11	METAL CHIP	15K	5%	1/16W
R770	1-216-835-11	METAL CHIP	15K	5%	1/16W
R771	1-216-833-11	METAL CHIP	10K	5%	1/16W
R772	1-216-833-11	METAL CHIP	10K	5%	1/16W
R773	1-216-833-11	METAL CHIP	10K	5%	1/16W
R774	1-216-864-11	METAL CHIP	0	5%	1/16W
R775	1-216-864-11	METAL CHIP	0	5%	1/16W
R776	1-216-864-11	METAL CHIP	0	5%	1/16W
R777	1-216-864-11	METAL CHIP	0	5%	1/16W
R778	1-216-864-11	METAL CHIP	0	5%	1/16W
R779	1-216-864-11	METAL CHIP	0	5%	1/16W
R780	1-216-864-11	METAL CHIP	0	5%	1/16W
R782	1-216-821-11	METAL CHIP	1K	5%	1/16W
R783	1-216-817-11	METAL CHIP	470	5%	1/16W
R784	1-216-817-11	METAL CHIP	470	5%	1/16W
R785	1-216-864-11	METAL CHIP	0	5%	1/16W
R786	1-216-864-11	METAL CHIP	0	5%	1/16W
R787	1-216-845-11	METAL CHIP	100K	5%	1/16W
R788	1-216-802-11	METAL CHIP	27	5%	1/10W
R789	1-216-802-11	METAL CHIP	27	5%	1/10W

Ref. No.	Part No.	Description			Remarks
R790	1-216-864-11	METAL CHIP	0	5%	1/16W
R791	1-216-823-11	METAL CHIP	1.5K	5%	1/16W
R792	1-216-799-11	METAL CHIP	15	5%	1/16W
R793	1-216-799-11	METAL CHIP	15	5%	1/16W
R795	1-216-864-11	METAL CHIP	0	5%	1/16W
R796	1-216-829-11	METAL CHIP	4.7K	5%	1/16W
R797	1-216-833-11	METAL CHIP	10K	5%	1/16W
R798	1-216-829-11	METAL CHIP	4.7K	5%	1/16W
R799	1-216-833-11	METAL CHIP	10K	5%	1/16W
		< VIBRATOR >			
X721	1-795-244-11	VIBRATOR, CERAMIC 10MHz			
X751	1-760-337-21	VIBRATOR, CRYSTAL 12MHz			
X753	1-795-244-11	VIBRATOR, CERAMIC 10MHz			

****

	A-4732-584-A	H/P BOARD, COMPLETE			
		**********			
		< CAPACITOR >			
C422	1-163-031-91	CERAMIC CHIP	0.01uF		50V
C431	1-163-031-91	CERAMIC CHIP	0.01uF		50V
C491	1-163-009-91	CERAMIC CHIP	0.001uF	10.00%	50V
C492	1-163-009-91	CERAMIC CHIP	0.001uF	10.00%	50V
C493	1-115-339-11	CERAMIC CHIP	0.1uF	10.00%	50V
		< JACK >			
J401	1-764-106-21	JACK (PHONES)			
		< RESISTOR >			
R425	1-216-073-91	RES-CHIP	10K	5%	1/10W
R426	1-216-081-00	METAL CHIP	22K	5%	1/10W
R427	1-216-089-91	RES-CHIP	47K	5%	1/10W
R431	1-216-049-11	RES-CHIP	1K	5%	1/10W
R432	1-216-057-00	METAL CHIP	2.2K	5%	1/10W
R433	1-216-057-00	METAL CHIP	2.2K	5%	1/10W
R434	1-216-065-91	RES-CHIP	4.7K	5%	1/10W
R435	1-216-073-91	RES-CHIP	10K	5%	1/10W
R436	1-216-081-00	METAL CHIP	22K	5%	1/10W
R437	1-216-089-91	RES-CHIP	47K	5%	1/10W
		< SWITCH >			
S427	1-762-875-21	SWITCH, KEYBOARD (DIRECTION TUNING MODE/PLAY MODE)			
S428	1-762-875-21	SWITCH, KEYBOARD (FM MODE/REPEAT)			
S431	1-762-875-21	SWITCH, KEYBOARD (DISPLAY)			
S432	1-762-875-21	SWITCH, KEYBOARD (SYNCHRO MODE)			
S433	1-762-875-21	SWITCH, KEYBOARD (REC MODE)			
S434	1-762-875-21	SWITCH, KEYBOARD (ENTER/START)			
S435	1-762-875-21	SWITCH, KEYBOARD (● MD)			
S436	1-762-875-21	SWITCH, KEYBOARD (❚❚ TAPE)			
S437	1-762-875-21	SWITCH, KEYBOARD (● TAPE)			

****

	1-686-400-11	LED BOARD (EXCEPT (SILVER)(HK.KR))			
	1-686-406-12	LED BOARD (SILVER)(HK,KR)			
		**********			
		< CAPACITOR >			
C464	1-163-021-91	CERAMIC CHIP	0.01uF	10.00%	50V (SILVER)(HK,KR)
C465	1-163-009-91	CERAMIC CHIP	0.001uF	10.00%	50V (EXCEPT (SILVER)(HK,KR))
		< DIODE >			
D464	6-500-236-01	DIODE SELU5920C-TP15 (SILVER)(HK,KR)			
D465	6-500-236-01	DIODE SELU5920C-TP15 (SILVER)(HK,KR)			
D466	6-500-236-01	DIODE SELU5920C-TP15 (SILVER)(HK,KR)			
D467	8-719-079-49	DIODE NSSW450-BRS-TVR (EXCEPT (SILVER)(HK,KR))			
D468	8-719-079-49	DIODE NSSW450-BRS-TVR (EXCEPT (SILVER)(HK,KR))			
		< RESISTOR >			
R467	1-216-031-00	METAL CHIP	180	5%	1/10W (SILVER)(HK,KR)
R469	1-216-027-00	METAL CHIP	120	5%	1/10W (EXCEPT (SILVER)(HK,KR))

****

	1-674-336-12	LOADING BOARD			
		**********			
		< CONNECTOR >			
* CN151	1-568-943-11	PIN, CONNECTOR 5P			
		< SWITCH >			
S1	1-786-203-11	SWITCH, LEVER (SLIDE)			

****

	A-4732-582-A	MAIN BOARD, COMPLETE (AEP,UK)			
	A-4732-589-A	MAIN BOARD, COMPLETE (EXCEPT CND,AEP,UK)			
	A-4747-421-A	MAIN BOARD, COMPLETE (CND)			
		**********			
		< CAPACITOR >			
C101	1-107-826-11	CERAMIC CHIP	0.1uF	10.00%	16V
C102	1-104-665-11	ELECT	100uF	20.00%	10V
C103	1-104-665-11	ELECT	100uF	20.00%	10V
C104	1-107-826-11	CERAMIC CHIP	0.1uF	10.00%	16V
C105	1-162-964-11	CERAMIC CHIP	0.001uF	10%	50V
C106	1-107-826-11	CERAMIC CHIP	0.1uF	10.00%	16V
C109	1-107-826-11	CERAMIC CHIP	0.1uF	10.00%	16V
C110	1-162-918-11	CERAMIC CHIP	18PF	5.00%	50V
C111	1-162-917-11	CERAMIC CHIP	15PF	5%	50V
C115	1-126-963-11	ELECT	4.7uF	20.00%	50V
C200	1-126-963-11	ELECT	4.7uF	20.00%	50V
C201	1-126-963-11	ELECT	4.7uF	20.00%	50V
C202	1-126-963-11	ELECT	4.7uF	20.00%	50V
C203	1-126-963-11	ELECT	4.7uF	20.00%	50V
C215	1-126-963-11	ELECT	4.7uF	20.00%	50V
C221	1-107-826-11	CERAMIC CHIP	0.1uF	10.00%	16V
C222	1-104-665-11	ELECT	100uF	20.00%	10V
C223	1-162-970-11	CERAMIC CHIP	0.01uF	10%	25V
C224	1-162-970-11	CERAMIC CHIP	0.01uF	10%	25V
C225	1-162-970-11	CERAMIC CHIP	0.01uF	10%	25V
C227	1-162-970-11	CERAMIC CHIP	0.01uF	10%	25V
C230	1-162-964-11	CERAMIC CHIP	0.001uF	10%	50V
C231	1-128-499-11	ELECT	220uF	20.00%	16V
C232	1-162-964-11	CERAMIC CHIP	0.001uF	10%	50V

Ref. No.	Part No.	Description			Remarks
C233	1-107-826-11	CERAMIC CHIP	0.1uF	10.00%	16V
C234	1-128-499-11	ELECT	220uF	20.00%	16V
C235	1-127-876-11	CERAMIC	0.01uF	10%	50V
C236	1-127-872-11	CERAMIC	4700PF	10%	50V
C237	1-127-884-11	CERAMIC	0.047uF	10%	50V
C238	1-162-964-11	CERAMIC CHIP	0.001uF	10%	50V
C239	1-124-584-00	ELECT	100uF	20%	10V
C240	1-128-821-11	CERAMIC	1000PF	5%	50V
C241	1-126-935-11	ELECT	470uF	20.00%	6.3V
C242	1-128-821-11	CERAMIC	1000PF	5%	50V
C243	1-126-935-11	ELECT	470uF	20.00%	6.3V
C244	1-128-821-11	CERAMIC	1000PF	5%	50V
C245	1-162-964-11	CERAMIC CHIP	0.001uF	10%	50V
C246	1-126-935-11	ELECT	470uF	20.00%	6.3V
C247	1-162-964-11	CERAMIC CHIP	0.001uF	10%	50V
C248	1-126-935-11	ELECT	470uF	20.00%	6.3V
C249	1-162-964-11	CERAMIC CHIP	0.001uF	10%	50V
C250	1-126-935-11	ELECT	470uF	20.00%	6.3V
C253	1-126-963-11	ELECT	4.7uF	20.00%	50V
C254	1-126-963-11	ELECT	4.7uF	20.00%	50V
C255	1-104-665-11	ELECT	100uF	20.00%	10V
C256	1-107-826-11	CERAMIC CHIP	0.1uF	10.00%	16V
C259	1-107-826-11	CERAMIC CHIP	0.1uF	10.00%	16V
C260	1-162-964-11	CERAMIC CHIP	0.001uF	10%	50V (AEP,UK)
C261	1-104-665-11	ELECT	100uF	20.00%	10V (AEP,UK)
C262	1-126-933-11	ELECT	100uF	20.00%	16V
C263	1-162-964-11	CERAMIC CHIP	0.001uF	10%	50V
C264	1-162-927-11	CERAMIC CHIP	100PF	5%	50V
C265	1-162-927-11	CERAMIC CHIP	100PF	5%	50V
C266	1-162-927-11	CERAMIC CHIP	100PF	5%	50V
C267	1-162-927-11	CERAMIC CHIP	100PF	5%	50V
C278	1-162-927-11	CERAMIC CHIP	100PF	5%	50V
C279	1-162-927-11	CERAMIC CHIP	100PF	5%	50V
C280	1-126-963-11	ELECT	4.7uF	20.00%	50V
C281	1-126-963-11	ELECT	4.7uF	20.00%	50V
C282	1-126-963-11	ELECT	4.7uF	20.00%	50V
C283	1-126-963-11	ELECT	4.7uF	20.00%	50V
C284	1-126-961-11	ELECT	2.2uF	20.00%	50V
C285	1-126-963-11	ELECT	4.7uF	20.00%	50V
C286	1-130-474-00	MYLAR	0.0018uF	5%	50V
C287	1-137-189-11	FILM	0.18uF	5.00%	50V
C288	1-137-189-11	FILM	0.18uF	5.00%	50V
C289	1-162-964-11	CERAMIC CHIP	0.001uF	10%	50V
C290	1-126-963-11	ELECT	4.7uF	20.00%	50V
C291	1-126-963-11	ELECT	4.7uF	20.00%	50V
C292	1-126-963-11	ELECT	4.7uF	20.00%	50V
C293	1-126-963-11	ELECT	4.7uF	20.00%	50V
C294	1-126-961-11	ELECT	2.2uF	20.00%	50V
C295	1-126-963-11	ELECT	4.7uF	20.00%	50V
C296	1-130-474-00	MYLAR	0.0018uF	5%	50V
C297	1-137-189-11	FILM	0.18uF	5.00%	50V
C298	1-137-189-11	FILM	0.18uF	5.00%	50V
C299	1-162-964-11	CERAMIC CHIP	0.001uF	10%	50V
C300	1-162-964-11	CERAMIC CHIP	0.001uF	10%	50V
C301	1-126-965-91	ELECT	22uF	20.00%	50V
C302	1-162-927-11	CERAMIC CHIP	100PF	5%	50V
C303	1-162-964-11	CERAMIC CHIP	0.001uF	10%	50V
C304	1-125-972-91	ELECT	100uF	20.00%	16V
C305	1-162-964-11	CERAMIC CHIP	0.001uF	10%	50V
C306	1-126-935-11	ELECT	470uF	20.00%	16V
C307	1-126-933-11	ELECT	100uF	20.00%	16V
C308	1-162-964-11	CERAMIC CHIP	0.001uF	10%	50V
C309	1-162-964-11	CERAMIC CHIP	0.001uF	10%	50V
C347	1-162-927-11	CERAMIC CHIP	100PF	5%	50V
C348	1-162-927-11	CERAMIC CHIP	100PF	5%	50V
C350	1-104-905-11	CAPACITOR	0.22F		5.5V
C351	1-126-157-11	ELECT	10uF	20%	16V
C352	1-126-157-11	ELECT	10uF	20%	16V
C353	1-126-157-11	ELECT	10uF	20%	16V
C354	1-126-157-11	ELECT	10uF	20%	16V
C355	1-104-905-11	CAPACITOR	0.22F		5.5V
C356	1-126-964-11	ELECT	10uF	20.00%	50V
C357	1-126-964-11	ELECT	10uF	20.00%	50V
C358	1-127-715-91	CERAMIC CHIP	0.22uF	10%	16V (AEP,UK)
C358	1-107-826-11	CERAMIC CHIP	0.1uF	10.00%	16V (EXCEPT AEP,UK)
C359	1-127-715-91	CERAMIC CHIP	0.22uF	10%	16V
C360	1-162-964-11	CERAMIC CHIP	0.001uF	10%	50V
		< CONNECTOR >			
CN101	1-766-956-11	CONNECTOR, BOARD TO BOARD 15P			
CN102	1-784-786-11	CONNECTOR, FFC 25P			
CN103	1-779-291-11	CONNECTOR,FFC(LIF(NON-ZIF))23P			
* CN104	1-564-520-11	PLUG, CONNECTOR 5P			
CN105	1-784-780-11	CONNECTOR, FFC 19P			
CN106	1-568-830-11	CONNECTOR, FFC 11P			
CN108	1-784-780-11	CONNECTOR, FFC 19P			
CN109	1-785-331-11	PIN, CONNECTOR (LIGHT ANGLE)5P			
CN110	1-784-776-11	CONNECTOR, FFC 15P (AEP,UK)			
CN110	1-568-830-11	CONNECTOR, FFC 11P (EXCEPT AEP,UK)			
CN220	1-815-194-11	CONNECTOR, USB (B)			
* CN301	1-568-449-11	HOUSING, CONNECTOR(PC BOARD)3P			
		< DIODE >			
D101	8-719-988-61	DIODE 1SS355TE-17			
D103	8-719-988-61	DIODE 1SS355TE-17			
D110	8-719-988-61	DIODE 1SS355TE-17			
D111	8-719-988-61	DIODE 1SS355TE-17			
D112	8-719-988-61	DIODE 1SS355TE-17			
D113	8-719-988-61	DIODE 1SS355TE-17			
D114	8-719-988-61	DIODE 1SS355TE-17			
D115	8-719-988-61	DIODE 1SS355TE-17			
D120	8-719-200-82	DIODE 11ES2-TA2B			
D201	8-719-988-61	DIODE 1SS355TE-17			
D203	8-719-988-61	DIODE 1SS355TE-17			
D241	8-719-200-82	DIODE 11ES2-TA2B			
D260	8-719-017-79	DIODE MA8033-TX (AEP,UK)			
D349	8-719-988-61	DIODE 1SS355TE-17			
D350	8-719-988-61	DIODE 1SS355TE-17			
D351	8-719-988-61	DIODE 1SS355TE-17			
D352	8-719-988-61	DIODE 1SS355TE-17			
D353	8-719-988-61	DIODE 1SS355TE-17			
D354	8-719-988-61	DIODE 1SS355TE-17			

MAIN

Ref. No.	Part No.	Description			Remarks
D355	8-719-988-61	DIODE 1SS355TE-17			
D356	8-719-988-61	DIODE 1SS355TE-17			
D357	8-719-988-61	DIODE 1SS355TE-17			
D358	8-719-988-61	DIODE 1SS355TE-17			
		< GROUND TERMINAL >			
EPT100	1-537-771-21	TERMINAL BOARD, GROUND			
EPT102	1-537-771-21	TERMINAL BOARD, GROUND			
		< FERRITE BEAD >			
FB221	1-216-864-11	METAL CHIP	0	5%	1/16W
FB229	1-216-864-11	METAL CHIP	0	5%	1/16W
FB230	1-216-864-11	METAL CHIP	0	5%	1/16W
FB231	1-216-864-11	METAL CHIP	0	5%	1/16W
FB232	1-216-864-11	METAL CHIP	0	5%	1/16W
FB233	1-216-864-11	METAL CHIP	0	5%	1/16W
FB234	1-216-864-11	METAL CHIP	0	5%	1/16W
FB235	1-216-864-11	METAL CHIP	0	5%	1/16W
FB236	1-216-864-11	METAL CHIP	0	5%	1/16W
FB237	1-216-864-11	METAL CHIP	0	5%	1/16W
FB238	1-216-864-11	METAL CHIP	0	5%	1/16W
FB239	1-216-864-11	METAL CHIP	0	5%	1/16W
FB240	1-216-864-11	METAL CHIP	0	5%	1/16W
FB241	1-216-864-11	METAL CHIP	0	5%	1/16W
FB242	1-216-864-11	METAL CHIP	0	5%	1/16W
FB243	1-216-864-11	METAL CHIP	0	5%	1/16W
FB255	1-410-393-11	INDUCTOR CHIP	100uH		
FB260	1-216-864-11	METAL CHIP	0	5%	1/16W
		< IC >			
IC101	6-803-024-01	IC M30622MGN-B16FP			
IC102	8-759-669-03	IC LC75342			
IC220	8-759-598-69	IC BA6956AN			
IC252	8-749-923-05	TORX178B			
IC253	8-759-325-67	IC TC7SH04FU(TE85R)			
IC259	8-759-325-67	IC TC7SH04FU(TE85R)			
IC353	8-759-532-64	IC M62703SL-TP			
IC355	6-703-627-01	IC NJU7201L40(T3)			
IC356	6-703-627-01	IC NJU7201L40(T3)			
		< JUMPER RESISTOR >			
JR101	1-216-864-11	METAL CHIP	0	5%	1/16W
JR201	1-216-864-11	METAL CHIP	0	5%	1/16W
JR254	1-216-864-11	METAL CHIP	0	5%	1/16W
JR255	1-216-864-11	METAL CHIP	0	5%	1/16W
JR259	1-216-864-11	METAL CHIP	0	5%	1/16W
JR260	1-216-864-11	METAL CHIP	0	5%	1/16W
		< JUMPER RESISTOR >			
JW104	1-216-864-11	METAL CHIP	0	5%	1/16W
JW107	1-216-864-11	METAL CHIP	0	5%	1/16W
JW108	1-216-864-11	METAL CHIP	0	5%	1/16W
JW140	1-216-864-11	METAL CHIP	0	5%	1/16W
JW272	1-216-864-11	METAL CHIP	0	5%	1/16W
JW360	1-216-864-11	METAL CHIP	0	5%	1/16W
JW399	1-249-411-11	CARBON	330	5%	1/4W (AEP,UK)

Ref. No.	Part No.	Description			Remarks
		< TRANSISTOR >			
Q110	8-729-040-20	TRANSISTOR	RT1P137L-TP		
Q111	8-729-900-53	TRANSISTOR	DTC114EKA-T146		
Q230	8-729-900-53	TRANSISTOR	DTC114EKA-T146		
Q231	8-729-027-23	TRANSISTOR	DTA114EKA-T146		
Q232	8-729-120-28	TRANSISTOR	2SC2412K-T-146-QR		
Q233	8-729-026-49	TRANSISTOR	2SA1037AK-T146-QR		
Q234	8-729-026-49	TRANSISTOR	2SA1037AK-T146-QR		
Q235	8-729-120-28	TRANSISTOR	2SC2412K-T-146-QR		
Q236	8-729-027-23	TRANSISTOR	DTA114EKA-T146		
Q237	8-729-900-53	TRANSISTOR	DTC114EKA-T146		
Q351	8-729-120-28	TRANSISTOR	2SC2412K-T-146-QR		
Q353	8-729-120-28	TRANSISTOR	2SC2412K-T-146-QR		
		< RESISTOR >			
R101	1-247-807-31	CARBON	100	5%	1/4W
R102	1-247-807-31	CARBON	100	5%	1/4W (AEP,UK)
R103	1-216-809-11	METAL CHIP	100	5%	1/16W
R104	1-216-821-11	METAL CHIP	1K	5%	1/16W
R105	1-216-809-11	METAL CHIP	100	5%	1/16W
R106	1-216-809-11	METAL CHIP	100	5%	1/16W
R107	1-216-809-11	METAL CHIP	100	5%	1/16W
R109	1-216-829-11	METAL CHIP	4.7K	5%	1/16W
R117	1-216-833-11	METAL CHIP	10K	5%	1/16W
R118	1-247-807-31	CARBON	100	5%	1/4W (AEP,UK)
R119	1-249-417-11	CARBON	1K	5%	1/4W F
R120	1-249-437-11	CARBON	47K	5%	1/4W
R121	1-247-807-31	CARBON	100	5%	1/4W
R122	1-247-807-31	CARBON	100	5%	1/4W
R123	1-247-807-31	CARBON	100	5%	1/4W
R124	1-249-421-11	CARBON	2.2K	5%	1/4W F
R125	1-216-821-11	METAL CHIP	1K	5%	1/16W
R126	1-247-887-00	CARBON	220K	5%	1/4W
R127	1-247-807-31	CARBON	100	5%	1/4W
R128	1-249-441-11	CARBON	100K	5%	1/4W
R129	1-216-809-11	METAL CHIP	100	5%	1/16W
R130	1-216-809-11	METAL CHIP	100	5%	1/16W
R132	1-249-417-11	CARBON	1K	5%	1/4W F
R133	1-247-807-31	CARBON	100	5%	1/4W
R134	1-249-417-11	CARBON	1K	5%	1/4W F
R135	1-247-807-31	CARBON	100	5%	1/4W
R136	1-216-809-11	METAL CHIP	100	5%	1/16W
R137	1-216-809-11	METAL CHIP	100	5%	1/16W
R138	1-249-417-11	CARBON	1K	5%	1/4W F
R140	1-216-809-11	METAL CHIP	100	5%	1/16W
R141	1-247-807-31	CARBON	100	5%	1/4W
R142	1-216-809-11	METAL CHIP	100	5%	1/16W
R143	1-247-807-31	CARBON	100	5%	1/4W
R144	1-247-807-31	CARBON	100	5%	1/4W
R150	1-216-833-11	METAL CHIP	10K	5%	1/16W
R151	1-247-807-31	CARBON	100	5%	1/4W
R152	1-249-417-11	CARBON	1K	5%	1/4W F
R153	1-249-417-11	CARBON	1K	5%	1/4W F
R154	1-249-417-11	CARBON	1K	5%	1/4W F
R155	1-247-807-31	CARBON	100	5%	1/4W

Ref. No.	Part No.	Description			Remarks
R156	1-249-417-11	CARBON	1K	5%	1/4W F
R157	1-249-417-11	CARBON	1K	5%	1/4W F
R158	1-216-809-11	METAL CHIP	100	5%	1/16W
R159	1-216-809-11	METAL CHIP	100	5%	1/16W
R160	1-247-807-31	CARBON	100	5%	1/4W
R161	1-247-807-31	CARBON	100	5%	1/4W
R166	1-216-809-11	METAL CHIP	100	5%	1/16W
R167	1-216-809-11	METAL CHIP	100	5%	1/16W
R168	1-247-807-31	CARBON	100	5%	1/4W
R169	1-249-417-11	CARBON	1K	5%	1/4W F
R170	1-249-417-11	CARBON	1K	5%	1/4W F
R171	1-216-833-11	METAL CHIP	10K	5%	1/16W
R172	1-216-833-11	METAL CHIP	10K	5%	1/16W
R175	1-216-821-11	METAL CHIP	1K	5%	1/16W
R176	1-216-833-11	METAL CHIP	10K	5%	1/16W
R177	1-216-833-11	METAL CHIP	10K	5%	1/16W
R178	1-216-809-11	METAL CHIP	100	5%	1/16W
R179	1-247-807-31	CARBON	100	5%	1/4W
R180	1-216-821-11	METAL CHIP	1K	5%	1/16W
R181	1-247-807-31	CARBON	100	5%	1/4W
R182	1-216-809-11	METAL CHIP	100	5%	1/16W
R183	1-247-807-31	CARBON	100	5%	1/4W
R184	1-216-809-11	METAL CHIP	100	5%	1/16W
R185	1-249-429-11	CARBON	10K	5%	1/4W
R189	1-247-807-31	CARBON	100	5%	1/4W
R190	1-216-821-11	METAL CHIP	1K	5%	1/16W
R191	1-216-821-11	METAL CHIP	1K	5%	1/16W
R192	1-216-829-11	METAL CHIP	4.7K	5%	1/16W
R193	1-216-829-11	METAL CHIP	4.7K	5%	1/16W
					(EXCEPT AEP,UK)
R194	1-216-821-11	METAL CHIP	1K	5%	1/16W
R195	1-216-821-11	METAL CHIP	1K	5%	1/16W
R197	1-216-821-11	METAL CHIP	1K	5%	1/16W
R200	1-216-821-11	METAL CHIP	1K	5%	1/16W
R201	1-216-841-11	METAL CHIP	47K	5%	1/16W
R202	1-216-833-11	METAL CHIP	10K	5%	1/16W
R203	1-216-833-11	METAL CHIP	10K	5%	1/16W
R204	1-216-833-11	METAL CHIP	10K	5%	1/16W
R205	1-216-825-11	METAL CHIP	2.2K	5%	1/16W
					(CND)
R205	1-216-829-11	METAL CHIP	4.7K	5%	1/16W
					(AEP,UK)
R206	1-216-829-11	METAL CHIP	4.7K	5%	1/16W
R207	1-216-833-11	METAL CHIP	10K	5%	1/16W
R208	1-216-857-11	METAL CHIP	1M	5%	1/16W
R209	1-216-833-11	METAL CHIP	10K	5%	1/16W
R210	1-216-833-11	METAL CHIP	10K	5%	1/16W
R211	1-216-833-11	METAL CHIP	10K	5%	1/16W
R212	1-249-429-11	CARBON	10K	5%	1/4W
R213	1-249-429-11	CARBON	10K	5%	1/4W
R214	1-216-833-11	METAL CHIP	10K	5%	1/16W
R215	1-216-825-11	METAL CHIP	2.2K	5%	1/16W
R216	1-216-825-11	METAL CHIP	2.2K	5%	1/16W
R217	1-216-833-11	METAL CHIP	10K	5%	1/16W
					(EXCEPT AEP,UK)
R218	1-216-833-11	METAL CHIP	10K	5%	1/16W
					(EXCEPT AEP,UK)
R219	1-216-821-11	METAL CHIP	1K	5%	1/16W
R221	1-216-815-11	METAL CHIP	330	5%	1/16W

Ref. No.	Part No.	Description			Remarks
R222	1-216-821-11	METAL CHIP	1K	5%	1/16W
R223	1-216-821-11	METAL CHIP	1K	5%	1/16W
R224	1-216-821-11	METAL CHIP	1K	5%	1/16W
R225	1-216-833-11	METAL CHIP	10K	5%	1/16W
R226	1-216-833-11	METAL CHIP	10K	5%	1/16W
R230	1-216-845-11	METAL CHIP	100K	5%	1/16W
R231	1-216-845-11	METAL CHIP	100K	5%	1/16W
R232	1-216-833-11	METAL CHIP	10K	5%	1/16W
R233	1-249-429-11	CARBON	10K	5%	1/4W
R234	1-216-845-11	METAL CHIP	100K	5%	1/16W
R235	1-216-833-11	METAL CHIP	10K	5%	1/16W
R236	1-216-833-11	METAL CHIP	10K	5%	1/16W
R240	1-216-809-11	METAL CHIP	100	5%	1/16W
R241	1-216-845-11	METAL CHIP	100K	5%	1/16W
R245	1-216-809-11	METAL CHIP	100	5%	1/16W
R246	1-216-845-11	METAL CHIP	100K	5%	1/16W
R255	1-216-809-11	METAL CHIP	100	5%	1/16W
R260	1-216-864-11	METAL CHIP	0	5%	1/16W
					(AEP,UK)
R261	1-216-827-11	METAL CHIP	3.3K	5%	1/16W
R262	1-216-809-11	METAL CHIP	100	5%	1/16W
R263	1-216-809-11	METAL CHIP	100	5%	1/16W
R264	1-216-809-11	METAL CHIP	100	5%	1/16W
R265	1-216-827-11	METAL CHIP	3.3K	5%	1/16W
R280	1-249-417-11	CARBON	1K	5%	1/4W F
R281	1-216-845-11	METAL CHIP	100K	5%	1/16W
R282	1-216-821-11	METAL CHIP	1K	5%	1/16W
R283	1-216-845-11	METAL CHIP	100K	5%	1/16W
R284	1-216-821-11	METAL CHIP	1K	5%	1/16W
R285	1-216-845-11	METAL CHIP	100K	5%	1/16W
R286	1-216-821-11	METAL CHIP	1K	5%	1/16W
R287	1-216-845-11	METAL CHIP	100K	5%	1/16W
R288	1-216-821-11	METAL CHIP	1K	5%	1/16W
R289	1-216-845-11	METAL CHIP	100K	5%	1/16W
R290	1-249-417-11	CARBON	1K	5%	1/4W F
R291	1-216-845-11	METAL CHIP	100K	5%	1/16W
R292	1-216-821-11	METAL CHIP	1K	5%	1/16W
R293	1-216-845-11	METAL CHIP	100K	5%	1/16W
R294	1-216-821-11	METAL CHIP	1K	5%	1/16W
R295	1-216-845-11	METAL CHIP	100K	5%	1/16W
R296	1-216-821-11	METAL CHIP	1K	5%	1/16W
R297	1-216-845-11	METAL CHIP	100K	5%	1/16W
R298	1-216-821-11	METAL CHIP	1K	5%	1/16W
R299	1-216-845-11	METAL CHIP	100K	5%	1/16W
R350	1-216-864-11	METAL CHIP	0	5%	1/16W
R352	1-216-833-11	METAL CHIP	10K	5%	1/16W
R354	1-216-864-11	METAL CHIP	0	5%	1/16W
R355	1-216-833-11	METAL CHIP	10K	5%	1/16W
R356	1-216-829-11	METAL CHIP	4.7K	5%	1/16W
R357	1-216-833-11	METAL CHIP	10K	5%	1/16W
R358	1-216-837-11	METAL CHIP	22K	5%	1/16W
		< JACK >			
SJ302	1-764-593-21	JACK 2P (ANALOG IN L/R)			
		< VIBRATOR >			
X100	1-567-098-41	VIBRATOR, CRYSTAL 32.768kHz			
X101	1-781-107-21	VIBRATOR, SERAMIC 16MHz			

****

Ref. No.	Part No.	Description			Remarks
	A-4732-580-A	PANEL BOARD, COMPLETE (EXCEPT (SILVER)(HK,KR))			
	A-4734-754-A	PANEL BOARD, COMPLETE (SILVER)(HK,KR)			
		**********			
		< CAPACITOR >			
C401	1-163-133-00	CERAMIC CHIP	470PF	5%	50V
C402	1-163-133-00	CERAMIC CHIP	470PF	5%	50V
C403	1-163-251-11	CERAMIC CHIP	100PF	5.00%	50V
C404	1-163-251-11	CERAMIC CHIP	100PF	5.00%	50V
C405	1-124-584-00	ELECT	100uF	20%	10V
C406	1-126-160-11	ELECT	1uF	20%	50V
C407	1-126-160-11	ELECT	1uF	20%	50V
C411	1-163-031-91	CERAMIC CHIP	0.01uF		50V
C414	1-163-021-91	CERAMIC CHIP	0.01uF	10.00%	50V
C415	1-163-021-91	CERAMIC CHIP	0.01uF	10.00%	50V
C421	1-163-031-91	CERAMIC CHIP	0.01uF		50V
C442	1-124-589-11	ELECT	47uF	20%	16V
C471	1-163-021-91	CERAMIC CHIP	0.01uF	10.00%	50V
		< CONNECTOR >			
CN401	1-784-741-11	CONNECTOR, FFC 19P			
* CN403	1-564-708-11	PIN, CONNECTOR (SMALL TYPE) 6P			
		< DIODE >			
D451	8-719-058-04	DIODE SEL5223S-TP15 (I/⏻)			
D471	6-500-458-01	DIODE SELU5E20C-PTP15 (EXCEPT (SILVER)(HK,KR))			
D471	6-500-236-01	DIODE SELU5920C-TP15 (SILVER)(HK,KR)			
D473	6-500-458-01	DIODE SELU5E20C-PTP15 (EXCEPT (SILVER)(HK,KR))			
D473	6-500-236-01	DIODE SELU5920C-TP15 (SILVER)(HK,KR)			
		< GROUND TERMINAL >			
EPT400	1-537-771-21	TERMINAL BOARD, GROUND			
		< IC >			
IC401	8-759-826-33	IC NJL73H400A (B)			
		< JUMPER RESISTOR >			
JR405	1-216-295-91	SHORT CHIP	0		
JR406	1-216-295-91	SHORT CHIP	0		
		< TRANSISTOR >			
Q401	8-729-027-23	TRANSISTOR	DTA114EKA-T146		
Q402	8-729-120-28	TRANSISTOR	2SC2412K-T-146-QR		
Q451	8-729-120-28	TRANSISTOR	2SC2412K-T-146-QR		
Q471	8-729-120-28	TRANSISTOR	2SC2412K-T-146-QR		
		< RESISTOR >			
R401	1-216-025-11	RES-CHIP	100	5%	1/10W
R402	1-216-025-11	RES-CHIP	100	5%	1/10W
R403	1-216-025-11	RES-CHIP	100	5%	1/10W
R404	1-216-025-11	RES-CHIP	100	5%	1/10W
R405	1-216-073-91	RES-CHIP	10K	5%	1/10W
R406	1-216-049-11	RES-CHIP	1K	5%	1/10W
R407	1-216-073-91	RES-CHIP	10K	5%	1/10W
R411	1-216-049-11	RES-CHIP	1K	5%	1/10W
R412	1-216-057-00	METAL CHIP	2.2K	5%	1/10W
R413	1-216-057-00	METAL CHIP	2.2K	5%	1/10W
R414	1-216-065-91	RES-CHIP	4.7K	5%	1/10W
R415	1-216-073-91	RES-CHIP	10K	5%	1/10W
R416	1-216-081-00	METAL CHIP	22K	5%	1/10W
R417	1-216-089-91	RES-CHIP	47K	5%	1/10W
R421	1-216-049-11	RES-CHIP	1K	5%	1/10W
R422	1-216-057-00	METAL CHIP	2.2K	5%	1/10W
R423	1-216-057-00	METAL CHIP	2.2K	5%	1/10W
R424	1-216-065-91	RES-CHIP	4.7K	5%	1/10W
R441	1-216-001-00	METAL CHIP	10	5%	1/10W
R451	1-216-065-91	RES-CHIP	4.7K	5%	1/10W
R452	1-216-061-91	RES-CHIP	3.3K	5%	1/10W
R453	1-216-073-91	RES-CHIP	10K	5%	1/10W
R465	1-216-049-11	RES-CHIP	1K	5%	1/10W
R466	1-216-073-91	RES-CHIP	10K	5%	1/10W
R468	1-216-295-91	SHORT CHIP	0		
R471	1-216-027-00	METAL CHIP	120	5%	1/10W (EXCEPT (SILVER)(HK,KR))
R471	1-216-043-91	RES-CHIP	560	5%	1/10W (SILVER)(HK,KR)
R475	1-216-049-11	RES-CHIP	1K	5%	1/10W
R476	1-216-073-91	RES-CHIP	10K	5%	1/10W
		< SWITCH >			
S401	1-418-632-11	ENCODER, ROTARY (12 TYPE) (VOLUME)			
S411	1-762-875-21	SWITCH, KEYBOARD (I/⏻)			
S413	1-762-875-21	SWITCH, KEYBOARD (MD ►II)			
S414	1-762-875-21	SWITCH, KEYBOARD (CD ►II)			
S415	1-762-875-21	SWITCH, KEYBOARD (TAPE ◄►)			
S416	1-762-875-21	SWITCH, KEYBOARD (TUNER/BAND)			
S417	1-762-875-21	SWITCH, KEYBOARD (⏏ (MD))			
S418	1-762-875-21	SWITCH, KEYBOARD (⏏ (CD))			
S421	1-762-875-21	SWITCH, KEYBOARD (FUNCTION)			
S422	1-762-875-21	SWITCH, KEYBOARD (TUNING- /I◁◁◄◄)			
S423	1-762-875-21	SWITCH, KEYBOARD (TUNING+ /►►▷▷I)			
S424	1-762-875-21	SWITCH, KEYBOARD (■)			
S425	1-762-875-21	SWITCH, KEYBOARD (NET MD)			
		**********			
	A-4732-585-A	POWER BOARD, COMPLETE			
		**********			
		< CAPACITOR >			
C909	1-163-009-91	CERAMIC CHIP	0.001uF	10.00%	50V
C911	1-126-960-11	ELECT	1uF	20.00%	50V
C912	1-126-947-11	ELECT	47uF	20.00%	16V
C967	1-126-964-11	ELECT	10uF	20.00%	50V
C968	1-126-947-11	ELECT	47uF	20.00%	10V
C971	1-136-165-00	FILM	0.1uF	5.00%	50V
C972	1-126-936-11	ELECT	3300uF	20.00%	16V
C981	1-136-165-00	FILM	0.1uF	5.00%	50V
C982	1-115-364-11	ELECT	22000uF	20.00%	16V
C982	1-135-933-11	ELECT	22000uF	20%	16V
C983	1-136-165-00	FILM	0.1uF	5.00%	50V
C984	1-128-548-11	ELECT	4700uF	20.00%	25V
C985	1-130-495-00	MYLAR	0.1uF	5%	50V
C986	1-130-495-00	MYLAR	0.1uF	5%	50V

Ref. No.	Part No.	Description				Remarks
C992	1-126-961-11	ELECT	2.2uF	20.00%	50V	
		< CONNECTOR >				
CN971	1-691-767-11	PLUG (MICRO CONNECTOR) 5P				
CN981	1-564-507-11	PLUG, CONNECTOR 4P				
* CN984	1-564-518-11	PLUG, CONNECTOR 3P				
CN985	1-770-722-11	CONNECTOR, BOARD TO BOARD 6P				
* CN997	1-564-523-11	PLUG, CONNECTOR 8P				
* CN998	1-770-732-11	CONNECTOR, BOARD TO BOARD 15P				
		< DIODE >				
D901	8-719-988-61	DIODE 1SS355TE-17				
D902	8-719-988-61	DIODE 1SS355TE-17				
D971	8-719-200-82	DIODE 11ES2-TA2B				
D972	8-719-200-82	DIODE 11ES2-TA2B				
D973	8-719-200-82	DIODE 11ES2-TA2B				
D974	8-719-200-82	DIODE 11ES2-TA2B				
D982	8-719-500-56	DIODE D3SBA20				
D983	8-719-500-56	DIODE D3SBA20				
D984	8-719-200-82	DIODE 11ES2-TA2B				
D985	8-719-200-82	DIODE 11ES2-TA2B				
D986	8-719-200-82	DIODE 11ES2-TA2B				
D987	8-719-200-82	DIODE 11ES2-TA2B				
D992	8-719-988-61	DIODE 1SS355TE-17				
D993	8-719-988-61	DIODE 1SS355TE-17				
		< IC >				
IC911	8-759-231-57	IC TA7810S				
IC967	8-759-231-53	IC TA7805S				
		< RESISTOR >				
R993	1-249-417-11	CARBON	1K	5%	1/4W	F
R994	1-249-417-11	CARBON	1K	5%	1/4W	F
R995	1-249-433-11	CARBON	22K	5%	1/4W	

****

	1-686-397-11	REG BOARD				
		**********				
		< CAPACITOR >				
C901	1-126-964-11	ELECT	10uF	20.00%	50V	
C902	1-126-947-11	ELECT	47uF	20.00%	16V	
C903	1-126-964-11	ELECT	10uF	20.00%	50V	
C904	1-126-947-11	ELECT	47uF	20.00%	10V	
C905	1-126-964-11	ELECT	10uF	20.00%	50V	
C906	1-126-947-11	ELECT	47uF	20.00%	10V	
C907	1-126-964-11	ELECT	10uF	20.00%	50V	
C908	1-126-947-11	ELECT	47uF	20.00%	10V	
		< IC >				
IC901	8-759-231-57	IC TA7810S				
IC903	8-759-231-55	IC TA7808S				
IC905	8-759-071-48	IC TA7807S				
IC907	8-759-231-53	IC TA7805S				

****

	A-4730-687-A	TC BOARD, COMPLETE				
		**********				
		< CAPACITOR >				
C601	1-126-947-11	ELECT	47uF	20.00%	16V	
C602	1-130-483-00	MYLAR	0.01uF	5%	50V	
C604	1-130-495-00	MYLAR	0.1uF	5%	50V	
C605	1-126-964-11	ELECT	10uF	20.00%	50V	
C606	1-126-960-11	ELECT	1uF	20.00%	50V	
C607	1-162-962-11	CERAMIC CHIP	470PF	10%	50V	
C608	1-126-961-11	ELECT	2.2uF	20.00%	50V	
C610	1-162-961-11	CERAMIC CHIP	330PF	10%	50V	
C611	1-162-928-11	CERAMIC CHIP	120PF	5%	50V	
C612	1-162-946-11	CERAMIC CHIP	27PF	5%	50V	
C613	1-164-392-11	CERAMIC CHIP	390PF	10.00%	50V	
C614	1-130-483-00	MYLAR	0.01uF	5%	50V	
C630	1-126-933-11	ELECT	100uF	20.00%	16V	
C632	1-126-964-11	ELECT	10uF	20.00%	50V	
C633	1-126-964-11	ELECT	10uF	20.00%	50V	
C634	1-126-964-11	ELECT	10uF	20.00%	50V	
C635	1-126-960-11	ELECT	1uF	20.00%	50V	
C639	1-126-964-11	ELECT	10uF	20.00%	50V	
C640	1-126-947-11	ELECT	47uF	20.00%	16V	
C641	1-126-961-11	ELECT	2.2uF	20.00%	50V	
C642	1-137-150-11	MYLAR	0.01uF	5.00%	100V	
C643	1-130-485-00	MYLAR	0.015uF	5%	50V	
C644	1-130-481-00	MYLAR	0.0068uF	5%	50V	
C645	1-130-481-00	MYLAR	0.0068uF	5%	50V	
C646	1-130-486-00	MYLAR	0.018uF	10%	50V	
C647	1-126-964-11	ELECT	10uF	20.00%	50V	
C648	1-216-864-11	METAL CHIP	0	5%	1/16W	
C651	1-126-947-11	ELECT	47uF	20.00%	16V	
C652	1-130-483-00	MYLAR	0.01uF	5%	50V	
C654	1-130-495-00	MYLAR	0.1uF	5%	50V	
C655	1-126-964-11	ELECT	10uF	20.00%	50V	
C656	1-126-960-11	ELECT	1uF	20.00%	50V	
C657	1-162-962-11	CERAMIC CHIP	470PF	10%	50V	
C658	1-126-961-11	ELECT	2.2uF	20.00%	50V	
C660	1-162-961-11	CERAMIC CHIP	330PF	10%	50V	
C661	1-162-928-11	CERAMIC CHIP	120PF	5%	50V	
C662	1-162-946-11	CERAMIC CHIP	27PF	5%	50V	
C663	1-164-392-11	CERAMIC CHIP	390PF	10.00%	50V	
C664	1-130-483-00	MYLAR	0.01uF	5%	50V	
C681	1-162-968-11	CERAMIC CHIP	0.0047uF	10%	50V	
		< CONNECTOR >				
CN602	1-770-516-31	CONNECTOR, FFC 8P				
CN603	1-784-780-11	CONNECTOR, FFC 19P				
		< DIODE >				
D681	8-719-988-61	DIODE 1SS355TE-17				
		< GROUND TERMINAL >				
EPT600	1-537-771-21	TERMINAL BOARD, GROUND				
		< IC >				
IC601	6-702-130-01	IC HA12237F				
IC602	8-759-508-69	IC BA3126N				

TC TRANS

Ref. No.	Part No.	Description			Remarks
		< JUMPER RESISTOR >			
JR602	1-216-864-11	METAL CHIP	0	5%	1/16W
		< JUMPER RESISTOR >			
JW630	1-216-864-11	METAL CHIP	0	5%	1/16W
		< COIL >			
L601	1-410-780-11	INDUCTOR	27MH		
L651	1-410-780-11	INDUCTOR	27MH		
		< TRANSISTOR >			
Q639	8-729-040-20	TRANSISTOR	RT1P137L-TP		
Q640	8-729-029-66	TRANSISTOR	DTC114ESA-TP		
Q641	8-729-801-93	TRANSISTOR	2SD1387-34-TP		
Q642	8-729-142-46	TRANSISTOR	2SC2001TP-LK		
Q643	8-729-142-46	TRANSISTOR	2SC2001TP-LK		
Q680	8-729-029-66	TRANSISTOR	DTC114ESA-TP		
Q681	8-729-029-40	TRANSISTOR	DTA124ESA-TP		
Q691	8-729-900-53	TRANSISTOR	DTC114EKA-T146		
Q692	8-729-900-53	TRANSISTOR	DTC114EKA-T146		
Q693	8-729-140-04	TRANSISTOR	2SB1116-TP-LK		
Q694	8-729-116-57	TRANSISTOR	2SB1068TP-K		
		< RESISTOR >			
R601	1-216-829-11	METAL CHIP	4.7K	5%	1/16W
R602	1-216-829-11	METAL CHIP	4.7K	5%	1/16W
R603	1-216-827-11	METAL CHIP	3.3K	5%	1/16W
R604	1-216-833-11	METAL CHIP	10K	5%	1/16W
R605	1-216-841-11	METAL CHIP	47K	5%	1/16W
R606	1-216-825-11	METAL CHIP	2.2K	5%	1/16W
R607	1-216-833-11	METAL CHIP	10K	5%	1/16W
R609	1-216-825-11	METAL CHIP	2.2K	5%	1/16W
R610	1-216-832-11	METAL CHIP	8.2K	5%	1/16W
R611	1-216-837-11	METAL CHIP	22K	5%	1/16W
R630	1-216-857-11	METAL CHIP	1M	5%	1/16W
R631	1-216-837-11	METAL CHIP	22K	5%	1/16W
R632	1-216-821-11	METAL CHIP	1K	5%	1/16W
R633	1-216-833-11	METAL CHIP	10K	5%	1/16W
R635	1-216-809-11	METAL CHIP	100	5%	1/16W
R640	1-216-833-11	METAL CHIP	10K	5%	1/16W
R641	1-218-867-11	METAL CHIP	6.8K	5%	1/10W
R642	1-216-825-11	METAL CHIP	2.2K	5%	1/16W
⚠R643	1-219-787-17	FUSIBLE	5.6	5%	1/4W
⚠R644	1-219-787-17	FUSIBLE	5.6	5%	1/4W
R645	1-216-836-11	METAL CHIP	18K	5%	1/16W
R646	1-216-836-11	METAL CHIP	18K	5%	1/16W
R648	1-216-864-11	METAL CHIP	0	5%	1/16W
R651	1-216-829-11	METAL CHIP	4.7K	5%	1/16W
R652	1-216-829-11	METAL CHIP	4.7K	5%	1/16W
R653	1-216-827-11	METAL CHIP	3.3K	5%	1/16W
R654	1-216-833-11	METAL CHIP	10K	5%	1/16W
R655	1-216-841-11	METAL CHIP	47K	5%	1/16W
R656	1-216-825-11	METAL CHIP	2.2K	5%	1/16W
R657	1-216-833-11	METAL CHIP	10K	5%	1/16W
R659	1-216-825-11	METAL CHIP	2.2K	5%	1/16W
R660	1-216-832-11	METAL CHIP	8.2K	5%	1/16W
R661	1-216-837-11	METAL CHIP	22K	5%	1/16W
R680	1-216-829-11	METAL CHIP	4.7K	5%	1/16W
R681	1-216-825-11	METAL CHIP	2.2K	5%	1/16W
R682	1-216-825-11	METAL CHIP	2.2K	5%	1/16W
R683	1-216-819-11	METAL CHIP	680	5%	1/16W
R684	1-216-827-11	METAL CHIP	3.3K	5%	1/16W
R685	1-216-827-11	METAL CHIP	3.3K	5%	1/16W
R686	1-216-827-11	METAL CHIP	3.3K	5%	1/16W
R687	1-216-841-11	METAL CHIP	47K	5%	1/16W
R688	1-216-829-11	METAL CHIP	4.7K	5%	1/16W
R689	1-216-829-11	METAL CHIP	4.7K	5%	1/16W
R690	1-216-829-11	METAL CHIP	4.7K	5%	1/16W
R691	1-216-833-11	METAL CHIP	10K	5%	1/16W
R692	1-216-829-11	METAL CHIP	4.7K	5%	1/16W
R693	1-216-841-11	METAL CHIP	47K	5%	1/16W
R694	1-216-837-11	METAL CHIP	22K	5%	1/16W
R695	1-216-833-11	METAL CHIP	10K	5%	1/16W
		< VARIABLE RESISTOR >			
RV602	1-241-765-11	RES, ADJ, CARBON 22K			
RV603	1-241-768-11	RES, ADJ, CARBON 220K			
RV652	1-241-765-11	RES, ADJ, CARBON 22K			
RV653	1-241-768-11	RES, ADJ, CARBON 220K			
		< TRANSFORMER >			
T601	1-423-980-11	TRANSFORMER, BIAS OSCILLATION			
**********					
	1-686-403-11	TRANS BOARD (EXCEPT CND)			
		**********			
	1-689-658-11	TRANS BOARD (CND ONLY)			
		**********			
		< CAPACITOR >			
⚠C991	1-113-925-11	CERAMIC	0.01uF	20.00%	250V
⚠C994	1-113-925-11	CERAMIC	0.01uF	20.00%	250V
		< CONNECTOR >			
* CN991	1-580-230-11	PIN, CONNECTOR (PC BOARD) 2P			
CN992	1-564-321-00	PIN, CONNECTOR(3.96mm PITCH)2P			
		< DIODE >			
D991	8-719-800-76	DIODE 1SS133T-91 (CND)			
D991	8-719-988-61	DIODE 1SS355TE-17 (EXCEPT CND)			
		< TRANSISTOR >			
Q991	8-729-620-05	TRANSISTOR	2SC2603TP-EF		
		< RESISTOR >			
R991	1-249-417-11	CARBON	1K	5%	1/4W F
R992	1-249-429-11	CARBON	10K	5%	1/4W
R996	1-249-397-11	CARBON	22	5%	1/4W F
R997	1-219-237-91	SOLID	3.3M	20%	1/2W (CND)
		< RELAY >			
⚠RY991	1-755-467-11	RELAY (POWER)			

The components identified by mark ⚠ or dotted line with mark ⚠ are critical for safety. Replace only with part number specified.	Les composants identifiés par une marque ⚠ sont critiques pour la sécurité. Ne les remplacer que par une pièce portant le numéro spécifié.

Ref. No.	Part No.	Description	Remarks
		< TRANSFORMER >	
⚠T901	1-437-953-11	TRANSFORMER, POWER (SUB)	(EXCEPT CND,KR,CH)
⚠T901	1-437-954-11	TRANSFORMER, POWER (SUB)(KR,CH)	
⚠T901	1-439-950-11	TRANSFORMER, POWER (SUB)(CND)	
⚠T992	1-419-625-11	COIL, LINE FILTER	
**********			
		MISCELLANEOUS	
		**********	
2	1-824-192-11	WIRE (FLAT TYPE) (8 CORE)	
3	1-796-456-31	DECK, MECHANICAL	
13	1-792-830-11	WIRE (FLAT TYPE) (17 CORE)	
14	1-792-829-11	WIRE (FLAT TYPE) (27 CORE)	
20	1-773-121-11	WIRE (FLAT TYPE) (19 CORE)	
73	1-773-114-11	WIRE (FLAT TYPE) (19 CORE)	
103	1-824-699-11	WIRE (FLAT TYPE) (23 CORE)	
105	1-827-294-11	WIRE (FLAT TYPE) (25 CORE)	
106	1-769-940-11	WIRE (FLAT TYPE) (11 CORE)	(EXCEPT AEP,UK)
106	1-773-004-11	WIRE (FLAT TYPE) (15 CORE) (AEP,UK)	
107	1-693-604-11	TUNER (FM/AM) (AEP,UK)	
107	1-693-605-11	TUNER (FM/AM) (HK,KR,CH,AUS)	
107	1-693-623-31	TUNER (FM/AM) (CND)	
⚠112	1-769-079-12	CORD, POWER (KR)	
⚠112	1-775-787-62	CORD, POWER (AEP,UK,HK)	
⚠112	1-775-790-11	CORD, POWER (AUS)	
⚠112	1-782-464-12	CORD, POWER (CH)	
⚠112	1-783-531-32	CORD, POWER (CND)	
115	1-770-019-51	ADAPTOR, CONVERSION PLUG (UK,HK)	
209	1-678-514-11	PWB, FLEXIBLE	
⚠210	A-467-297-6A	DEVICE,MINI DISK KMS-262EP	
305	1-782-817-11	WIRE (FLAT TYPE) (16 CORE)	
⚠314	A-4735-885-A	BU-30B ASSY(including M902)	
⚠F981	1-533-452-11	FUSE, GLASS TUBE (DIA. 5)(4A/125V)(CND)	
⚠F981	1-533-471-11	FUSE, GLASS TUBE (DIA. 5)(T4AL/250V)	(EXCEPT CND)
⚠F983	1-533-452-11	FUSE, GLASS TUBE (DIA. 5)(4A/125V)(CND)	
⚠F983	1-533-471-11	FUSE, GLASS TUBE (DIA. 5)(T4AL/250V)	(EXCEPT CND)
⚠F985	1-533-452-11	FUSE, GLASS TUBE (DIA. 5)(4A/125V)(CND)	
⚠F985	1-533-471-11	FUSE, GLASS TUBE (DIA. 5)(T4AL/250V)	(EXCEPT CND)
⚠F987	1-533-452-11	FUSE, GLASS TUBE (DIA. 5)(4A/125V)(CND)	
⚠F987	1-533-471-11	FUSE, GLASS TUBE (DIA. 5)(T4AL/250V)	(EXCEPT CND,KR,CH)
FAN801	1-787-021-11	FAN, D.C.	
HR901	1-500-670-22	HEAD, OVER LIGHT	
LCD401	1-804-785-11	DISPLAY PANEL, LIQUID CRYSTAL	
M101	A-4735-757-A	MOTOR ASSY, SPINDLE	
M102	A-4672-900-A	MOTOR ASSY, SLED	
M103	A-4672-975-A	MOTOR ASSY, LOADING	
M201	A-4735-337-A	MOTOR (LD) ASSY (LOADING)	
M901	1-763-802-11	MOTOR, DC	
S102	1-771-957-11	SWITCH, PUSH (2 KEY)(REFLECT/PROTECT)	
⚠T900	1-437-950-11	TRANSFORMER, POWER(AEP,UK,HK,CH)	
⚠T900	1-437-951-11	TRANSFORMER, POWER(KR)	
⚠T900	1-439-874-11	TRANSFORMER, POWER(CND)	

The components identified by mark ⚠ or dotted line with mark ⚠ are critical for safety. Replace only with part number specified.	Les composants identifiés par une marque ⚠ sont critiques pour la sécurité. Ne les remplacer que par une pièce portant le numéro spécifié.

MEMO

HCD-M333

SONY

SERVICE MANUAL

Ver 1.2 2003. 06

Canadian Model
AEP Model
UK Model
E Model
Chinese Model
Australian Model

SUPPLEMENT-1

1. • **Addition of the note for Chinese model.** (ENG-03009)
2. • **Schematic diagram and printed wiring board of Canadian model are changed.** (ENG-03008)

9-877-180-81 **Sony Corporation**
2003F16-1 **Home Audio Company**
© 2003.06
Published by Sony Engineering Corporation

1. The following cautions sentence are added.

Laser component in this product is capable of emitting radiation exceeding the limit for Class 1.

与安全有关的零部件须知

在原理图上用阴影及 ⚠ 标记来识别的零部件在安全操作上是具有关键性的。这些零部件要用本手册中所示的部件号对应的索尼零部件进行更换。

在安全操作上具有关键性的电路调整与索尼公司出版的维修手册完全一致。在更换关键零部件时或怀疑动作失常时，请进行这些调整操作。

2. TRANS board of Canadian model changed.
About printed wiring board and schematic diagram, it has appeared after the fellowing page.

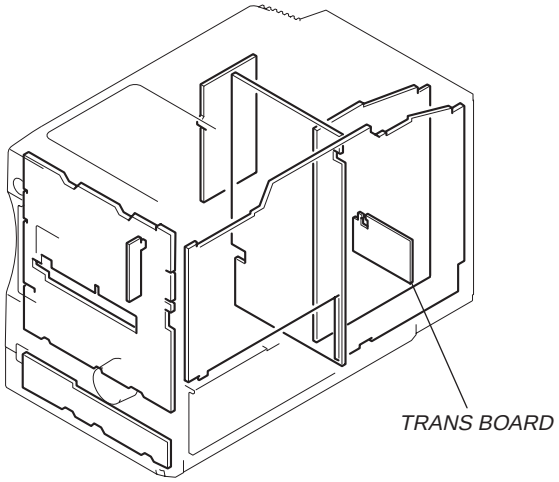

2-1. Printed Wiring Board – TRANS Board (only for Canadian model) – • : Uses unleaded solder.

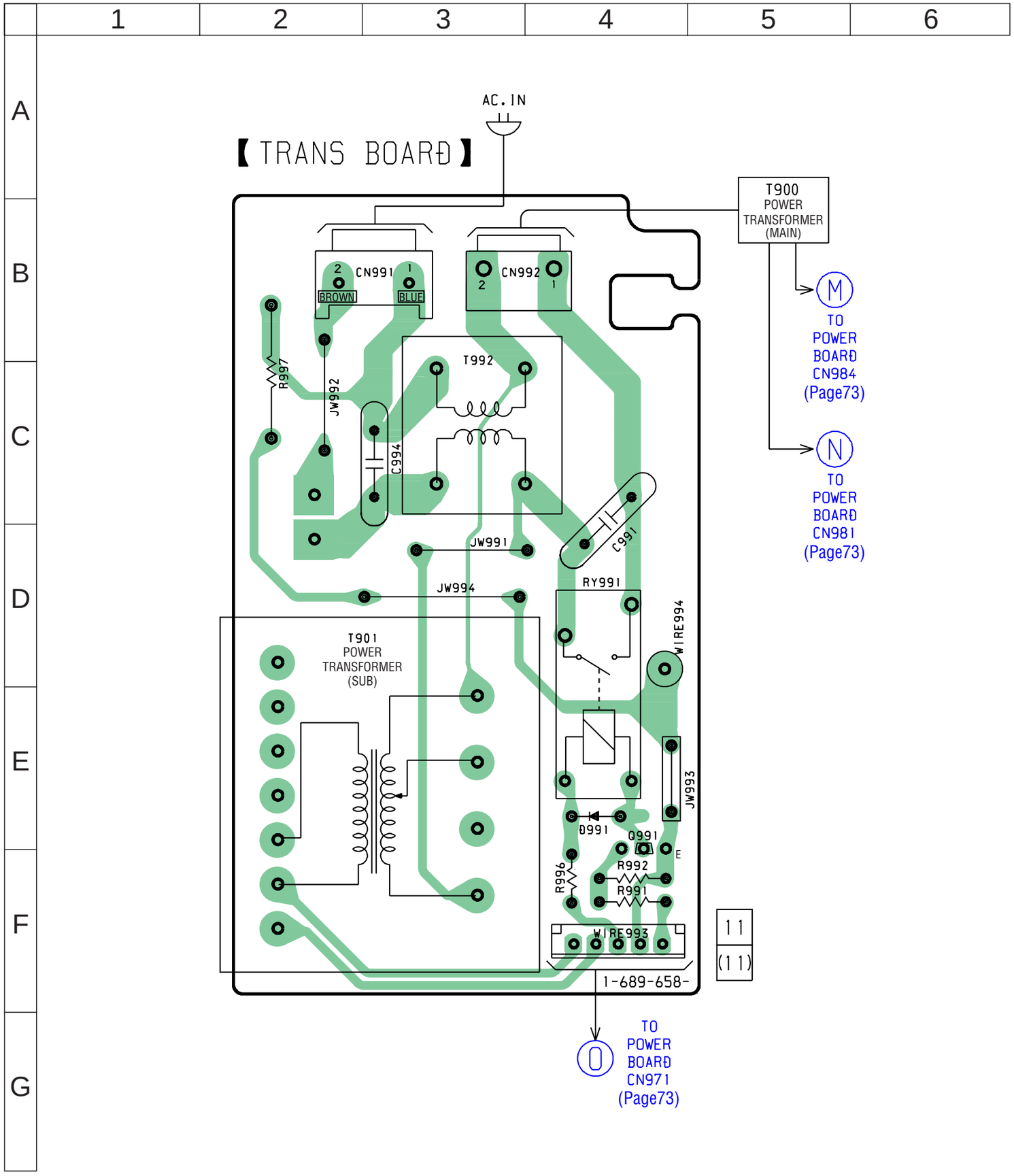

2-2. Schematic Diagram – TRANS Board (only for Canadian model) –

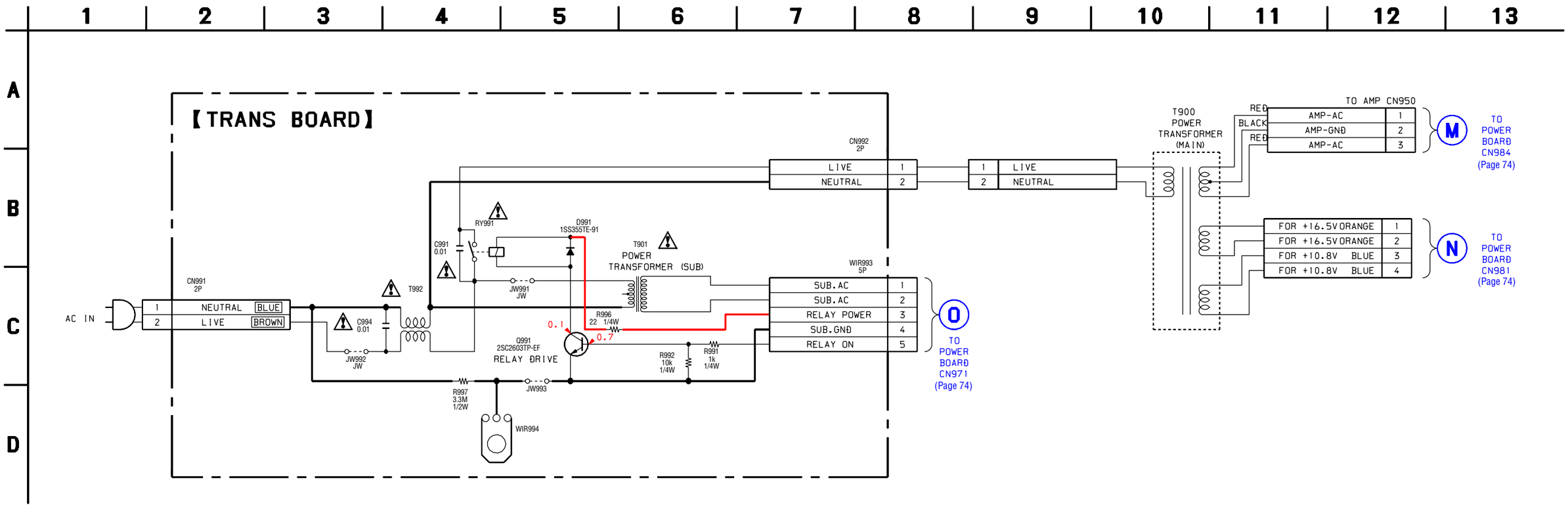

The components identified by mark ⚠ or dotted line with mark ⚠ are critical for safety. Replace only with part number specified.	Les composants identifiés par une marque ⚠ sont critiques pour la sécurité. Ne les remplacer que par une pièce portant le numéro spécifié.	以阴影和 ⚠ 标志来识别的零部件，在安全方面具有关键性，因此只能以规定号码的零部件来更换。

MEMO

REVISION HISTORY

Clicking the version allows you to jump to the revised page.
Also, clicking the version at the upper right on the revised page allows you to jump to the next revised page.

Ver.	Date	Description of Revision
1.0	2003.03	New
1.1	2003.05	Canadian, Korea, Chinese and Australian models addition (ENG-03003)
1.2	2003.06	Addition of SUPPLEMENT-1 (ENG-03008, 03009)
1.3	2004.01	Correction of Parts No. for Ref. No. 20 and 73 (SPM-03141)
1.4	2004.06	Change of Part No. for Ref. No. T900 (only for Chinese) (SPM-04059)
1.5	2005.02	Exchange of Parts No. and Description of Ref. No. 163 and 165 (SPM-05020)